N77-19132

T#77-21628 Not on

CONTRACT-REQUIRED DOCUMENT
Internal Distribution Only

This document is not to be distributed outside the Westinghouse Electric Corporation. (For information contact Contract Administration.)

REPRODUCIBLE COPY
(FACILITY CASEFILE COPY)

76-9C4-SIGRO-R1

NASA CR-135165

DESIGN, FABRICATION AND TEST OF PROTOTYPE FURNACE FOR CONTINUOUS GROWTH OF WIDE SILICON RIBBON

C. S. Duncan and R. G. Seidensticker

WESTINGHOUSE RESEARCH & DEVELOPMENT CENTER

Prepared for

NATIONAL AERONAUTICS AND SPACE ADMINISTRATION

NASA-Lewis Research Center
Contract NAS 3-19439
Final Report

MAR 1977
RECEIVED
NASA STI FACILITY
INPUT BRANCH

DESIGN, FABRICATION AND TEST OF PROTOTYPE FURNACE FOR CONTINUOUS GROWTH OF WIDE SILICON RIBBON

C. S. Duncan and R. G. Seidensticker

WESTINGHOUSE RESEARCH & DEVELOPMENT CENTER

Prepared for

NATIONAL AERONAUTICS AND SPACE ADMINISTRATION

NASA-Lewis Research Center
Contract NAS 3-19439
Final Report

76-9C4-SIGRO-R1

NASA CR-135165

DESIGN, FABRICATION AND TEST OF PROTOTYPE FURNACE FOR CONTINUOUS GROWTH OF WIDE SILICON RIBBON

C. S. Duncan and R. G. Seidensticker

WESTINGHOUSE RESEARCH & DEVELOPMENT CENTER

Prepared for

NATIONAL AERONAUTICS AND SPACE ADMINISTRATION

NASA-Lewis Research Center
Contract NAS 3-19439
Final Report

DESIGN, FABRICATION AND TEST OF PROTOTYPE FURNACE FOR CONTINUOUS GROWTH OF WIDE SILICON RIBBON

C. S. Duncan and R. G. Seidensticker

WESTINGHOUSE RESEARCH & DEVELOPMENT CENTER

Prepared for

NATIONAL AERONAUTICS AND SPACE ADMINISTRATION

NASA-Lewis Research Center
Contract NAS 3-19439
Final Report

Approved:

R. Mazelsky, Manager
Crystal Science & Technology

1. Report No.	2. Government Accession No.	3. Recipient's Catalog No.
NASA CR-135165		

4. Title and Subtitle	5. Report Date
DESIGN, FABRICATION AND TEST OF PROTOTYPE FURNACE FOR CONTINUOUS GROWTH OF WIDE SILICON RIBBON	December 1976
	6. Performing Organization Code
7. Author(s)	8. Performing Organization Report No.
C. S. Duncan and R. G. Seidensticker	76-9C4-SIGRO-R1
	10. Work Unit No.
9. Performing Organization Name and Address	
Westinghouse Electric Corporation R&D Center 1310 Beulah Road Pittsburgh, PA 15235	11. Contract or Grant No. NAS 3-19439
	13. Type of Report and Period Covered
12. Sponsoring Agency Name and Address	Contractor Report - Final
National Aeronautics & Space Administration Washington, DC 20546	14. Sponsoring Agency Code

15. Supplementary Notes

Project Manager: Larry R. Scudder, Solar Energy Division, NASA-Lewis Research Center, 21000 Brookpark Road, Cleveland, OH 44135

16. Abstract

This is the final report of a program having the overall objective of growing wide, thin silicon dendritic web crystals quasi-continuously from a semi-automated facility. This report covers the design considerations and fabrication of the facility as well as the test and operation phase; detailed engineering drawings are included as an appendix to the report.

During the test and operation phase of the program, more than eighty growth runs and numerous thermal test runs were performed. At the conclusion of the program, 2.4 cm wide web was being grown at thicknesses of 100 to 300 μm. As expected, the thickness and growth rate are closely related. Solar cells made from this material were tested at NASA-Lewis and found to have conversion efficiencies comparable to devices fabricated from Czochralski material.

Finally, recommendations are given for the design of more advanced dendritic growth facilities.

17. Key Words (Suggested by Author(s))			18. Distribution Statement
Silicon	design	convection	Unclassified - unlimited.
webs	solar	temperature	
ribbons	cells	distributions	
crystals	furnaces	oxide	
growth			
facilities			

19. Security Classif. (of this report)	20. Security Classif. (of this page)	21. No. of Pages	22. Price*
UNCLASSIFIED	UNCLASSIFIED	111	

* For sale by the National Technical Information Service, Springfield, Virginia 22161

TABLE OF CONTENTS

	Page
LIST OF ILLUSTRATIONS	iii
1. SUMMARY	1
2. INTRODUCTION	3
2.1 General	3
2.2 Background	3
2.3 Scope of Work	5
3. DISCUSSION	6
3.1 Design of the Facility	6
3.1.1 Structural Features	6
3.1.2 Sensing and Control	14
3.2 Fabrication	15
3.3 Test and Operation of the Growth Facility	16
3.3.1 Initial Test and Operation	16
3.3.2 Initial Growth Experiments	23
3.3.3 Advanced Thermal Testing and Growth Experiments	28
4. RESULTS	42
4.1 Material Results	42
4.2 Web Growth Requirements	45
5. CONCLUSIONS AND RECOMMENDATIONS	49
5.1 Process Yield	49
5.1.1 Width Potential	49
5.1.2 Growth Speed Potential	49
5.1.3 Thickness Potential	50
5.2 Major Accomplishments and Problems	50
5.2.1 Accomplishments	50
5.2.2 Unfinished Problems	51
5.3 Recommendations for Prototype of Pilot Production Facility	52
5.3.1 Growth Chamber	52
5.3.2 Storage Reel and Drive	53
5.3.3 Bottom Cover Plate Assembly	53
5.3.4 Top Cover Plate Assembly	54
5.3.5 Temperature and Dendrite Control	54
5.3.6 Melt Level Control	54

Page

5.3.7 Raw Silicon Feed System 55
5.3.8 Thermal Design 55
5.3.9 Method of Heating 55
5.3.10 Summary of Recommendations 55

REFERENCES 57

APPENDIX A -- DESIGN DRAWINGS 59

LIST OF ILLUSTRATIONS

		Page
Fig. 1.	Silicon Web Furnace: simplified front view.	7
Fig. 2.	Silicon Web Furnace: simplified side view.	8
Fig. 3.	Silicon Web Furnace: simplified top view.	9
Fig. 4.	Simplified crucible assembly.	12
Fig. 5.	Silicon web growth facility.	17
Fig. 6.	Internal configuration of the furnace.	18
Fig. 7.	Crucible/susceptor: thermal test pattern.	20
Fig. 8.	TC probe tips.	22
Fig. 9.	Schematic section of web growth.	25
Fig. 10.	Thermocouple probe hole locations.	29
Fig. 11.	Heavy lid layout.	34
Fig. 12.	Temperature distributions for susceptor and melt.	35
Fig. 13.	Baffled crucible.	38
Fig. 14.	Flat bottom crucible assembly.	40
Fig. 15.	Silicon dendritic web crystals.	43
Fig. 16.	Long dendritic web.	44

DESIGN, FABRICATION AND TEST OF PROTOTYPE FURNACE FOR CONTINUOUS GROWTH OF WIDE SILICON RIBBON

Final Report
Contract NAS 3-19439

1. SUMMARY

The objective of this program was to design, build, operate and evaluate a laboratory facility which is capable of growing wide, thin dendritic web crystals (ribbon) of silicon in a quasi-continuous mode with automatic control loops for all essential parameters. Finally, based on the results of this program, specific recommendations are made for the design of a prototype of a pilot production facility.

During the design phase of this program emphasis was placed on apparatus versatility with the intention being ease of modification for purposes of process development and identification of requirements. The facility was constructed according to design, and thermal verification tests were performed prior to the start of web growth experiments.

More than eighty experimental web growth runs and numerous thermal probing runs were performed. These experiments verified key features of the design, especially the elongated crucible/susceptor/heat shield system which is essential for the growth of wider (five centimeter) web. Areas which require further development also were identified, the most important being continued refinement of the thermal design to provide improved melt temperature distribution and minimal convective fluctuations of melt temperature. Also, further development of the melt replenishment system is needed.

At the conclusion of the program web widths as great as 2.4 centimeters had been achieved. Further thermal refinements can be expected to bring about growth width up to the full five centimeter dimensional capacity of the facility.

The thickness goal of 4 to 8 mils was readily achieved. It is important to note that web thickness and growth rate are closely

interrelated according to the thermal design of the crucible and susceptor system. In one set of experimental conditions, for example, 8 mil thick web was grown at a rate of 4 centimeters per minute. Future development work should include optimization of this relationship as a means of increasing process throughput.

Dendritic web grown by this facility was shown to be of high quality for solar cell application. Samples evaluated at NASA-Lewis were found to have solar conversion efficiency equal to that of high quality Czochralski grown silicon.

For reason of cost-effectiveness, design recommendations for a prototype of a pilot production facility place strong emphasis on apparatus simplification. This program identified process requirements sufficiently to suggest much simplification of design and economy of construction; some requirements are not yet completely resolved, however, and design recommendations include sufficient latitude to satisfy ultimate anticipated needs.

2. INTRODUCTION

2.1 General

This report summarizes the progress in the design, fabrication and operation of a laboratory facility for the quasi-continuous, automated growth of wide, thin silicon dendritic web. The ultimate goal for this equipment is to produce dendritic web at least 5 cm wide and approximately 150 μm thick at a rate of 2 to 3 cm/min for 120 hours under automatic control of the significant pulling parameters.

2.2 Background

The growth of semiconductor material in ribbon form has always been an attractive technique. When Billig reported the growth of germanium dendrite crystals in 1955,[1] an intensive study program was undertaken at the Westinghouse Research Laboratories to understand and develop this mode of growth. The result was a comprehensive evaluation of the characteristics of what was called "controlled dendritic growth" in semiconductors and a number of papers were published detailing the growth mechanisms, impurity distributions and crystal perfection.[2-9]

During the course of the studies, it was observed that occasionally two coplanar dendrites would grow simultaneously from a single seed with a film of liquid freezing between them. These "dendritic web crystals" were much wider than the dendrites themselves and were apparently much better suited for semiconductor device fabrication.[10-13] It was but a short time before not only germanium but also silicon was grown by this technique. Eventually, a pilot production facility was placed in operation and pilot quantities of solar cell arrays were produced. The anticipated market for these devices did not develop and

the development of techniques for growing large diameter Czochralski silicon reduced the market potential of web crystals for other silicon devices. With this poor economic prognosis, the silicon web program was terminated.

At the conclusion of these web crystal programs, pilot production facilities were routinely producing high quality material of 1 cm usable width and 6 to 15 meters in length. Wider material, up to 3 cm, was being grown on a laboratory scale. It was apparent that while there did not seem to be any fundamental limitations to the process; nevertheless, new concepts in apparatus were necessary to grow significantly wider and longer crystals than those being produced.

In the early 1970's the need for new, nonpolluting energy sources became apparent. Direct photovoltaic conversion of solar energy is an attractive technique if it can be made economically viable. One possibility in this direction would be the automated production of silicon solar cells. Silicon web crystals offered possibilities in this direction if greater material through-put could be achieved.

The opportunity to pursue this problem arrived with a study program under the aegis of the NASA-Lewis Research Center (Contract NAS 3-18034). The objectives of that program were to quantitatively define the conditions required for dendritic web growth and develop conceptual designs for appropriate growth systems. The growth system should in concept be capable of growing 5 cm wide web approxiamtely 150 μm thick at rates of 2 to 3 cm/min. Appropriate crucible replenishment concepts leading to quasi-continuous operation were to be identifeed as were control concepts for automated operation. At the conclusion of the study program, the present effort was instituted to design and construct a laboratory dendritic web growth apparatus to implement the design concepts.

2.3 Scope of Work

The present program encompasses a body of work intended to demonstrate the viability of the concepts developed in the previous study program. The specific efforts can be itemized as a number of discrete tasks such as: A. Engineering Design; B. Fabrication and Assembly; C. Initial Operation (semi-automatic); D. Final Operation (fully automatic) and E,F. Reporting. The engineering design and the fabrication/assembly tasks are the obvious precursors of the apparatus needed to demonstrate the process. The scope of Task C includes not only the initial test and operation, but also the identification and development of the control loops necessary for fully automatic operation. Finally, Task D covers the operation of the system in a fully automatic, quasi-continuous mode. The remaining contractual tasks cover the reporting requirements of the program including recommendations for a pilot line furnace design based on the results of this program.

This report discusses the progress which has been made in achieving the goals of the contractual tasks. While not all of the goals of all the tasks have been met with complete success, neither do any of the goals appear to be unattainable.

3. DISCUSSION

3.1 Design of the Facility

Three key objectives were considered in developing the engineering design of the dendritic web growth facility. First, the apparatus should be capable of demonstrating the growth of dendritic web according to the overall goals of the contract. To this end, the design implemented the technical requirements derived from the preceding study program, Contract NAS 3-18034.[14] The second objective was the development of web growth technology and advanced design data. It was realized that the conceptual design requirements were only a first approximation to the final requirements and would need to be modified as additional data were developed. To meet this objective, versatility was ranked over simplicity in the design so that changes in the facility could be accommodated with relative ease. Finally, the third objective of the design was to generate cost data which could be applied to an evaluation of future, more advanced, prototype production facilities. To this end, the engineering design was so structured to permit easy identification of the functional elements since the equipment appropriate to low cost production could be considerably simpler than the laboratory system.

3.1.1 Structural Features

Simplified sketches, Figs. 1, 2, and 3, are provided as an aid to understanding the key features of the system design. Full engineering detail drawings are included in Appendix A.

Growth Chamber. In order to obtain wide versatility and flexibility, the growth chamber was designed as a water-cooled, stainless steel rectangular box 45.7 x 45.7 x 61 cm (18 x 18 x 24 in.). Each of

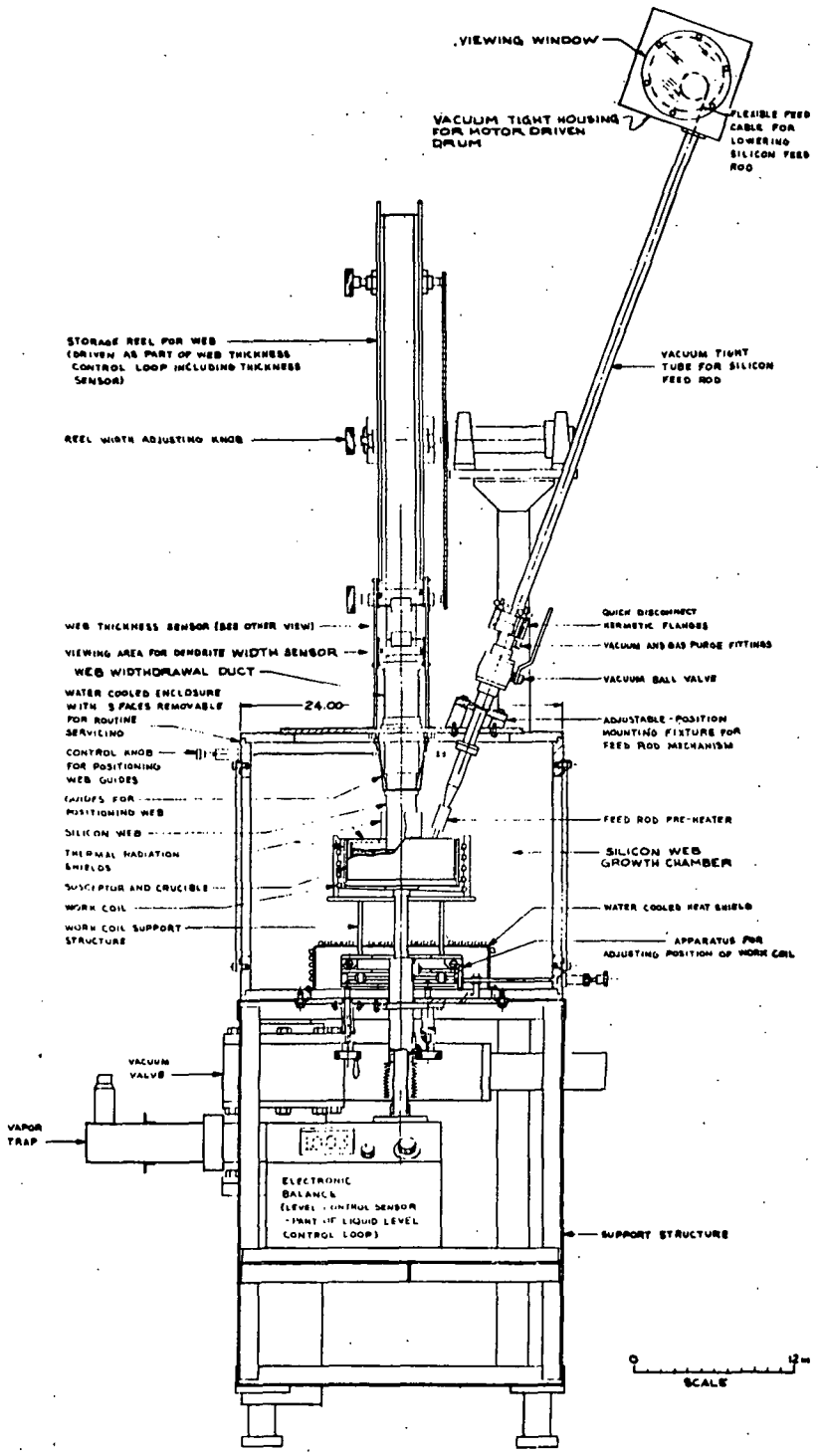

Fig. 1. Silicon Web Furnace: simplified front view.

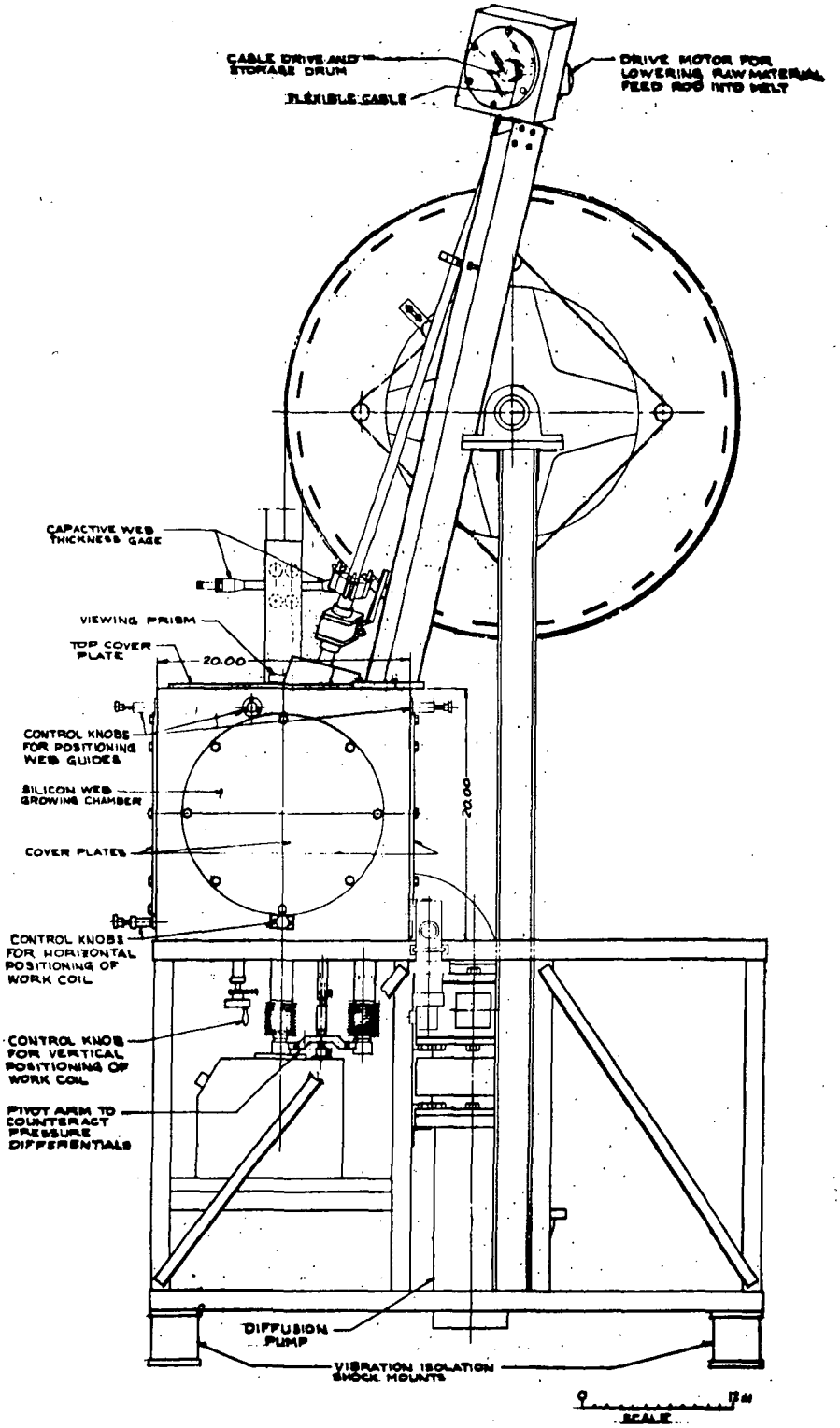

Fig. 2. Silicon Web Furnace: simplified side view.

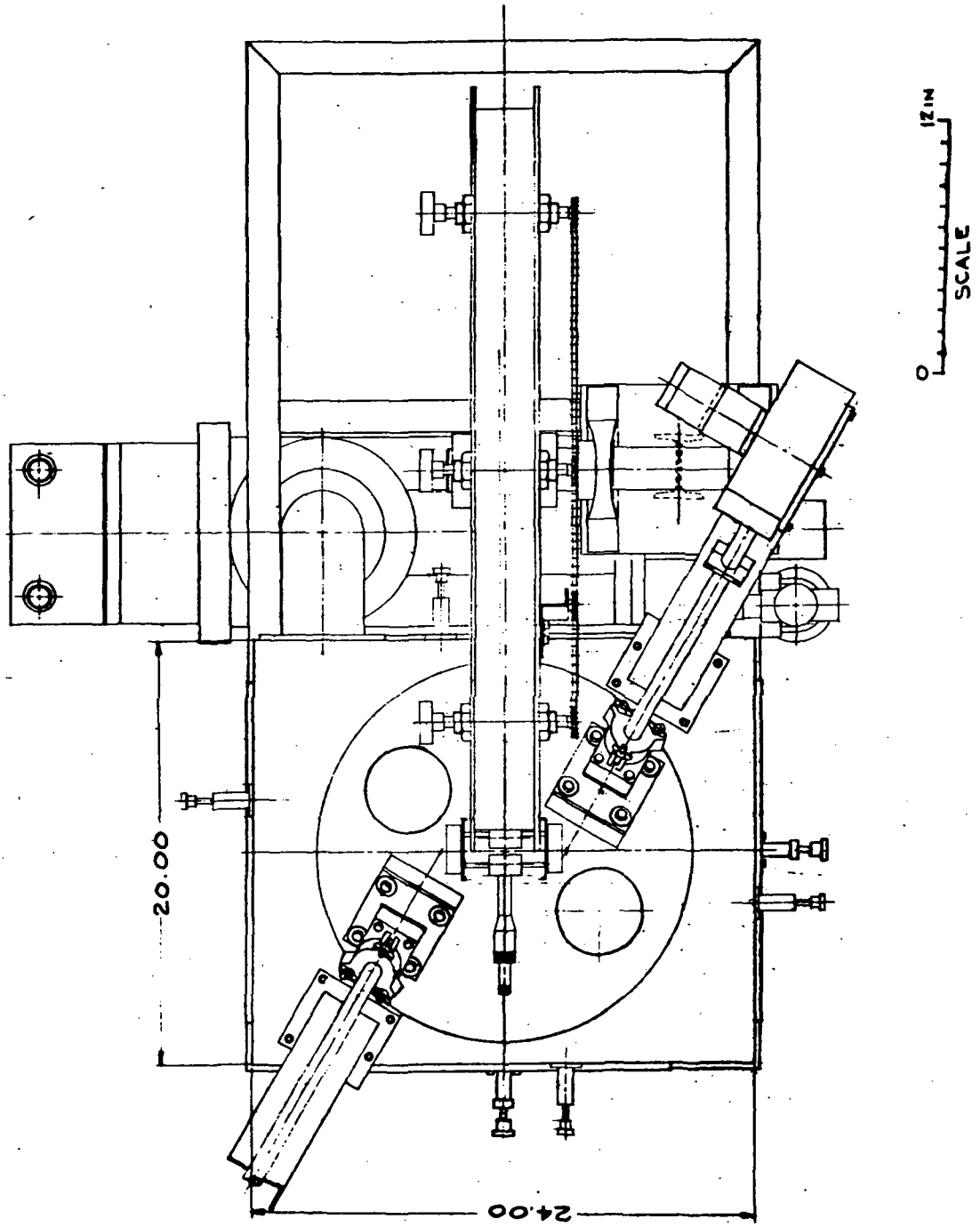

Fig. 3. Silicon Web Furnace: simplified top view.

the six faces has a large circular opening which is hermetically closed by an easily removable cover plate. These cover plates provide access for a majority of the required chamber penetrations (water, gas, power and instrumentation leads, web withdrawal duct, material feed, etc.). Also, much of the required internal and external mechanism is mounted on the cover plates. Thus, it is not only possible, but more importantly relatively convenient and inexpensive, to exchange a large portion of the operating features of the facility. Thus, both major and minor design modifications and adjustments may be efficiently implemented. Another advantage of this design is excellent accessibility -- some covers are essentially blank -- which enhances modifications, adjustments, cleaning and set-up for operation. The growth chamber is permanently affixed to a heavy metal frame which also supports supplementary apparatus such as the vacuum pumping system and the web withdrawal and storage reel. The frame may, if needed, be heavily weighted in the lowermost portion of its structure as a means of lowering the center of gravity and reducing vibration. Space is provided for shock mounting if necessary.

Ten kilohertz induction heating was chosen for this system because of its low coil voltage and consequent freedom from corona and arc breakdown in physically large crucible/susceptor systems. Induction heating is preferred because of its versatility in a development effort. The growth chamber will readily accommodate conversion to resistance heating if it becomes desirable to evaluate its technical or economic merits. Ultimately, resistance heating may prove to be more ecomomical than induction heating in this application because of probable lower capital cost.

Induction Work Coil Positioning. The work coil mounting and positioning structure is mounted in the bottom cover plate inside the growth chamber. Three-direction position adjustment is provided by way of externally-located manually-operated control knobs. Horizontal positioning is needed as a means for obtaining thermal symmetrical

balance within the crucible; vertical positioning is useful as a means for adjusting the vertical gradient within the crucible. All of these adjustments are possible during operation of the facility.

Crucible and Susceptor. The fundamental design requirements were developed under Contract NAS 3-18034.[14] They may be simply stated as a relatively small vertical temperature gradient along the center line of the melt and an overall cylindrical symmetry to match the geometry of the web. The conceptual design which was developed to meet these requirements is shown in Fig. 4.

The actual crucible/susceptor system follows the conceptual design very closely as can be seen from the detail drawings in Appendix A. One of the important features of the design is a totally enclosed top shield assembly to reduce possible degradation of the shield stack by silicon monoxide evolved from the melt. Nevertheless, the shield stack can be easily disassembled to replace or add new elements. This feature permits control over the vertical gradient in the melt which depends on the surface heat loss. Another feature of the design is the three-point kinematic support which permits easy removal of the susceptor with precise repositioning.

Web Withdrawal Route and Mechanism. A 36-inch diameter speed-controlled reel serves the dual purpose of a storage and a withdrawal mechanism for web as it grows. The web is routed vertically through a withdrawal duct which is provided with sufficient gas flow to prevent harmful entry of air into the growth chamber. Adjustable positioning guides for the web are located inside the growth chamber below the withdrawal duct. Above the withdrawal duct additional guides automatically center the web as it leaves the duct and passes through control loop sensors.

Raw Material Feed Mechanism. The versatility of the conceptual design accommodates alternative methods for continuous replenishment of the melt with raw silicon. The method which was selected for initial

Dwg.1687853

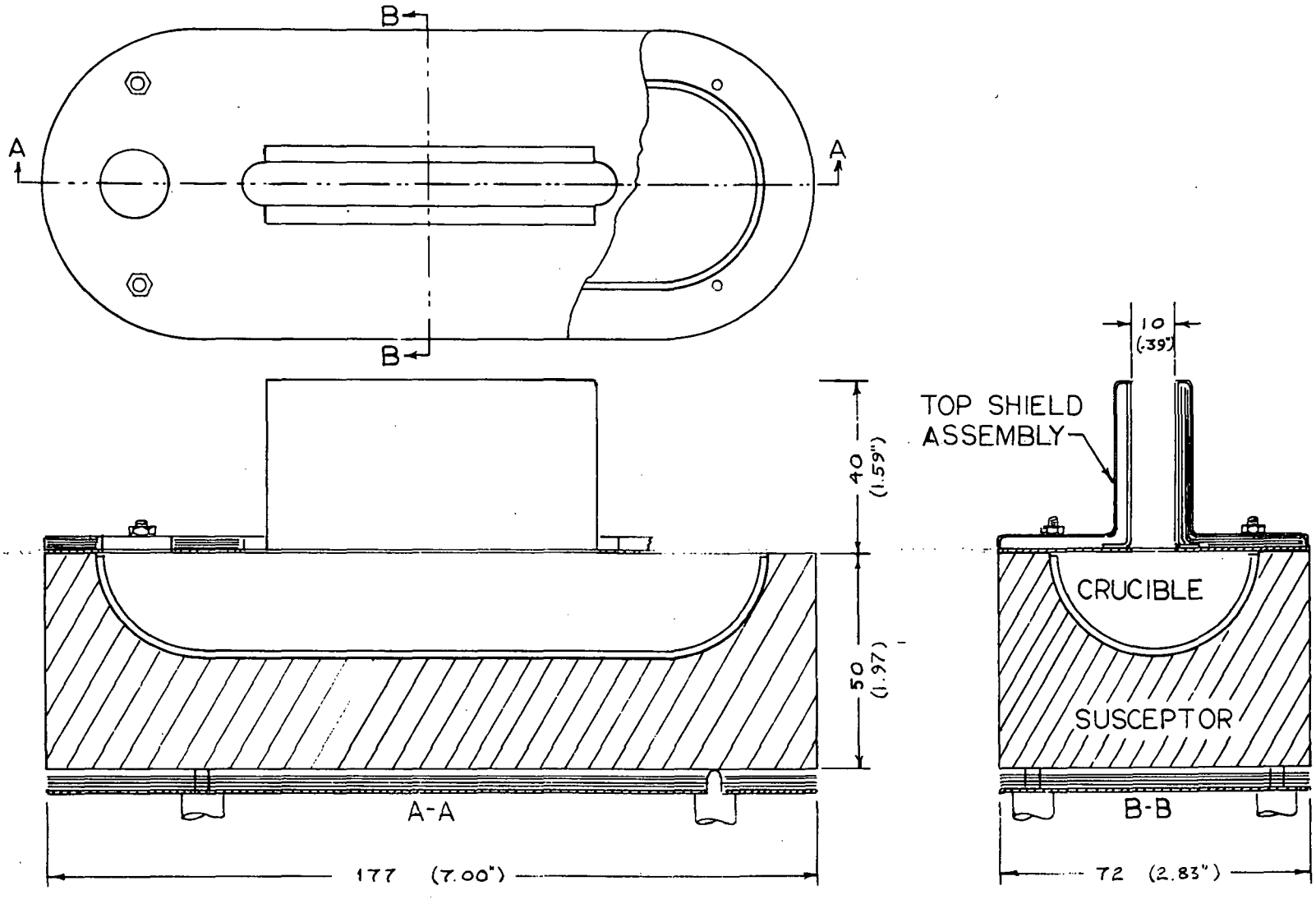

Fig. 4. Simplified crucible assembly.

use utilizes slim ($\sim$ 3 to 6 mm diameter) polycrystalline rods such as those which are mass produced as a key step in the commercial production of semiconductor grade silicon. The selected design utilizes rods of approximately one meter length and allows re-loading as often as necessary. Dual feed mechanisms, one at each end of the crucible, are to be used alternately in order to feed raw silicon by gravity at a continuous, uninterrupted rate. Raw material preheaters, located near the melt, can be provided for use with each feed mechanism and in addition to preheating the feed rods can be used continuously in order to help maintain thermal balance within the crucible. The feed mechanisms are mounted entirely on and through the top cover plate. If found to be desirable for the purpose of evaluation, the mechanisms can be converted to a pellet feed method.

Atmosphere. The growth chamber, feed mechanisms and the web withdrawal duct can be purged by high vacuum ($\sim 10^{-6}$ torr) prior to web growth. The design, as presently assembled, utilizes an inert gas, argon, as an atmospheric medium during web growth. Except for the web withdrawal duct the design provides for full range of pressure from high vacuum to a maximum in excess of one atmosphere. A removable cover plate is available to temporarily seal the web withdrawal duct during purging prior to the establishment of web growth. The need of the capability of growing web under vacuum or reduced pressure has not at this time been established and is not planned. The current design will allow conversion to vacuum and reduced pressure under growth conditions, if later found to be necessary, although the cost would be relatively high.

Vacuum Pumping System. Vacuum pumping capability is a built-in part of the design. The high vacuum pumping includes a high conductance gate valve and liquid nitrogen vapor trap in conjunction with a diffusion pump and mechanical pump. Vacuum roughing is handled by a separate mechanical pump, valve and pump line. Although not planned or used, a hot metal getter has been considered for use inside the growth chamber and can be added if later desired.

Viewing Capability. Ability to view the growth region of the melt is mandatory during the growth start-up procedure. After growth is established, viewing is essential not only for visible monitoring of the growth but additionally for adjusting the web positioning guides inside the growth chamber. To satisfy these needs view ports are located on the top access plate immediately adjacent to the withdrawal duct in order to provide viewing the growth region of the melt surface. View ports are also located in each of the side access cover plates.

3.1.2 Sensing and Control

Web growth in this facility will ultimately be governed automatically by three separate but related control loops, if needed. Although the exact design of control loops is yet to be determined, adequate space and accessibility has been provided such that final choices can be installed and evaluated without difficulty. Initially, web growth was controlled semi-automatically with manual operation decisions based on observations as well as sensor outputs not tied into control loops. The information gained by this experience will ascertain the degree of need for each of the three control loops and provide design guidance. The three control loops are discussed in the following sections.

Dendrite Width/Melt Temperature Control Loop. Within the normal range of withdrawal rate the width of the dendrites will depend primarily upon the melt temperature. It was initially anticipated that a scanning optical sensor used to measure dendrite width would be located immediately above the web withdrawal duct. For the system to function for web growth it is necessary that the melt temperature be held within a very narrow range essentially at the melting point of silicon. This is performed by means of a relatively conventional temperature control loop system similar to those commonly used for Czochralski growth of silicon. The dendrite width sensor, if needed, will be joined with the conventional system as a subsystem loop to provide control point

offset as required to maintain the desired dendrite width. Because the dendrite sensing occurs several minutes after growth, the response rate for correction of control point offset must be adjusted accordingly.

Web Thickness/Withdrawal Rate Control Loop. Assuming that the melt temperature is held within the narrow range indicated in the previous paragraph, the web thickness will depend primarily upon the withdrawal rate. An electronic capacitive thickness sensor is located immediately above the dendrite width sensor and will be used, if needed, in a control loop with the motor and mechanism which drives the withdrawal and storage reel. The response rate for this loop must also be adjusted to compensate for the fact that sensing occurs several minutes after growth.

Melt Level/Material Feed Rate Control Loop. An electronic balance has been employed to provide continuous sensing of the crucible weight and, consequently, the melt level. The electronic balance is located below the growth chamber and provides a dc voltage indicative of the melt level. The control loop must combine the balance and the motor drive units which lower polycrystalline silicon rods into the melt. The weighing system is insensitive to growth chamber internal-external pressure changes during operation by virtue of a pressure balancing arrangement which is built-in. An optical melt level sensor has been considered as an alternative to the weight sensor and could be used as a backup if needed.

3.2 Fabrication

With the exception of several bulky items which were beyond the capacity of the available equipment, all the components of the growth system were fabricated in the shop facilities of the Westinghouse Research Laboratories. The growth chamber shell was fabricated in an outside shop; however, the cooling tubing was attached by local personnel. The web take-up reel was another item that could not be handled "in-house".

This was an interesting fabrication operation since the reel was a built up assembly. The rim of the reel was formed by rolling an aluminum bar into a hoop and butt welding the ends. This hoop was then rough machined to accept a circular web plate which was then welded into place. Finally, the hub was welded into place and the entire three foot diameter reel finished machined to run true. None of the fabrication operations required for the system presented any problems, whether done in house or by an outside shop.

The final configuration of the system is shown in Fig. 5. The antennae-like projections at the top of the furnace chamber are the feed rod storage tubes. For convenience, the storage tubes are generally removed unless melt feeding experiments are being run. The internal configuration of the furnace is shown in Fig. 6. The susceptor proper is hidden by the alumina radiation baffles, but other components such as the work coil, part of the coil positioning mechanism and the web positioning guides are visible.

3.3 Test and Operation of the Growth Facility

The testing and operation of the growth facility occupied about two thirds of the contract period, and could be roughly divided into two phases. In the first phase, a number of gross problems in the operation were identified and solved. Once these initial problems were disposed of, the second phase ensued wherein a number of more subtle problems and effects were identified. A number of these more subtle problems were solved and most of the rest were identified to the point where solutions are evident, even though implementation requires further engineering development.

3.3.1 Initial Test and Operation

Thermal Testing. The study program had shown that the temperature distribution in the melt was probably very important in the successful growth of dendritic web, but had been able to give only

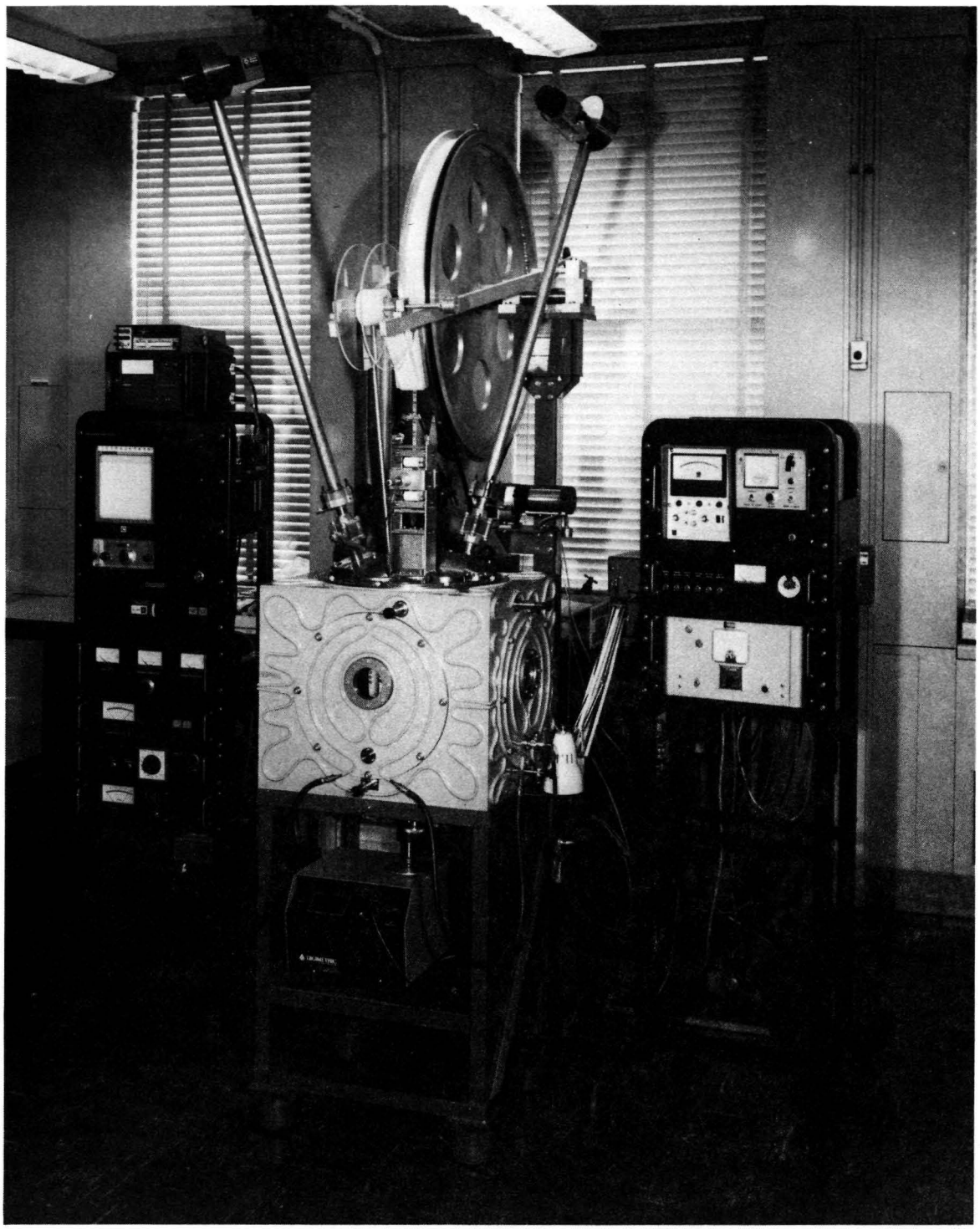

Fig. 5. Silicon web growth facility.

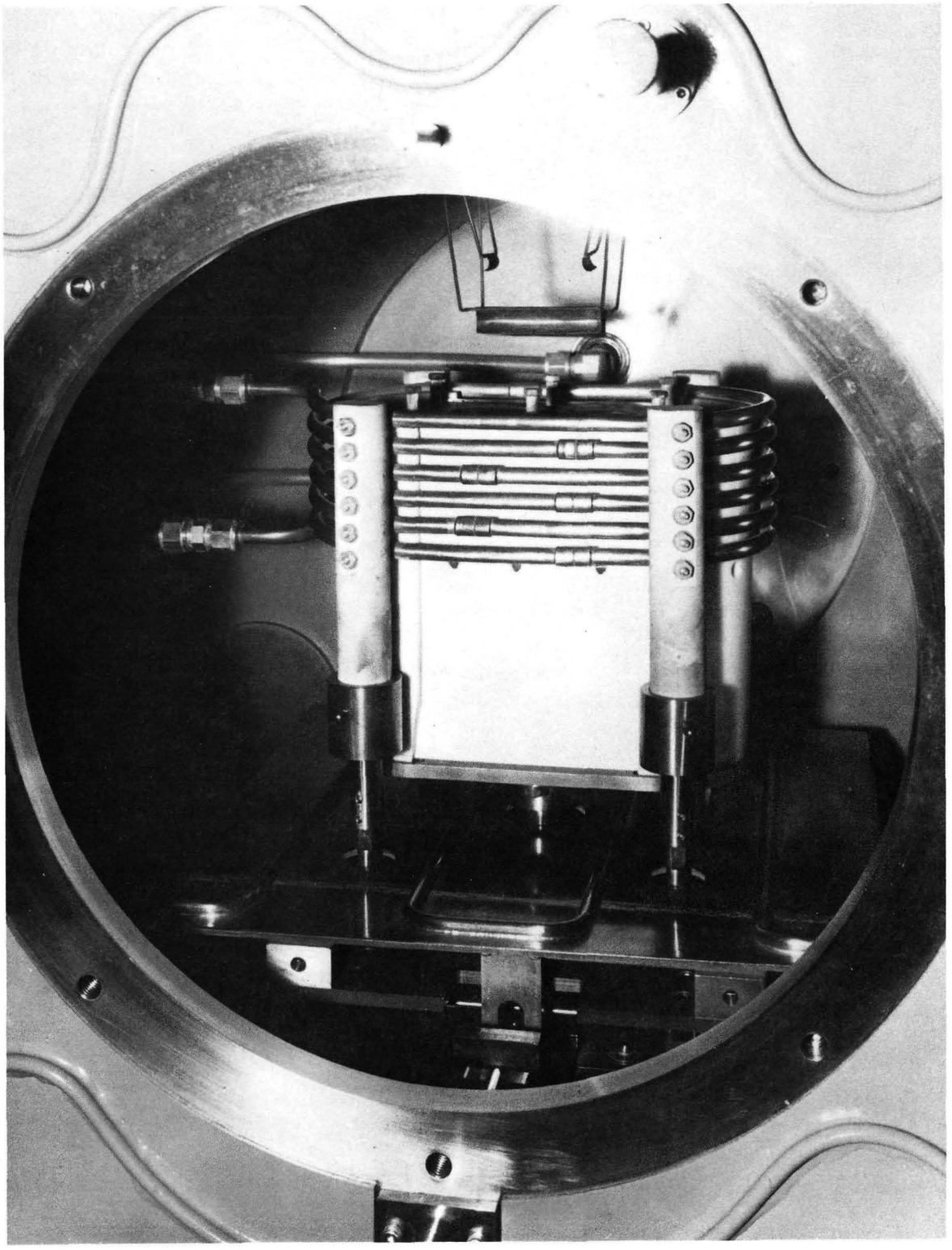

Fig. 6. Internal configuration of the furnace.

semi-quantitative guideline as to what was required. For example, it appeared necessary to have a relatively shallow vertical gradient in the vicinity of the growing melt, but the magnitude was uncertain; several degrees per centimeter was about the exactness. Therefore, as soon as the furnace system had been completed to the stage where the susceptor could be heated, the initial thermal testing was begun with the principal goal of measuring the vertical gradient in the melt. It was also realized that the overall temperature distribution was of importance, and a rather extensive measurement program was envisaged using both optical pyrometry and thermocouple probing to gather the data.

The intended pattern of measurement is shown in Fig. 7. The first set of measurements were to be performed with an empty crucible as follows:

1. Longitudinal traverse of the crucible cavity by optical pyrometry; points labeled ∇ in Fig. 7.
2. Vertical traverse of the susceptor wall by optical pyrometry; points labeled o in Fig. 7.
3. Vertical traverse of the susceptor wall with a thermocouple in the probe hole in the susceptor wall.

When this data had been developed, a crucible and sample would be put in the system and a series of measurements would be made in the liquid as indicated by the x's in Fig. 7. Because of the highly reactive nature of the molten silicon, the initial measurements were performed using liquid tin as an analog for the silicon. The pertinent thermal data are given in Table 1, and it can be seen that indeed tin should model silicon rather closely.

Initial measurements with an optical pyrometer showed that the technique did not have the temperature resolution necessary to provide a meaningful temperature profile of the susceptor and this approach was quickly dropped. On the other hand, no problems were encountered with the thermocouple probe measurements.

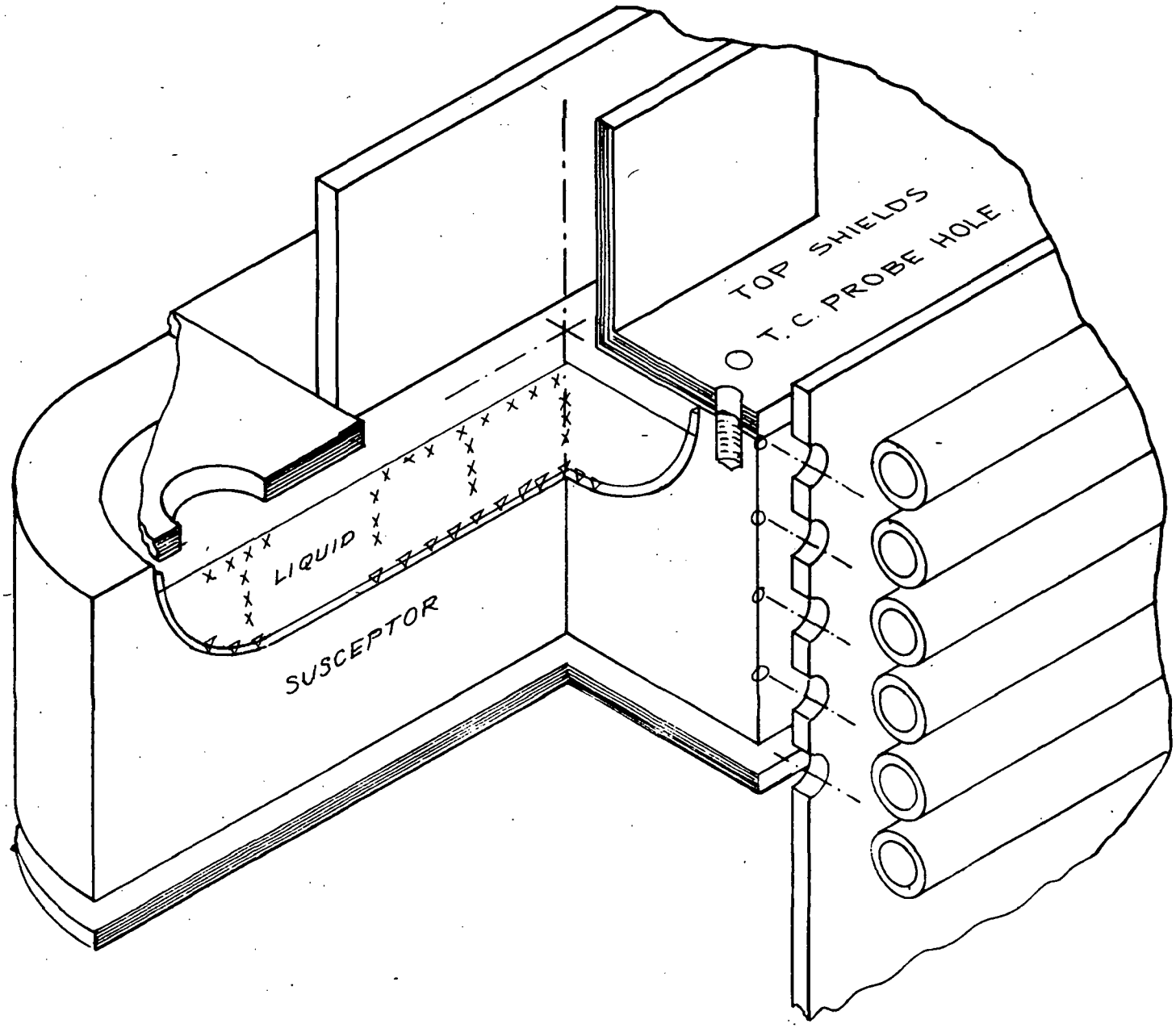

Fig. 7. Crucible/susceptor: thermal test pattern.

Table 1

		Si	Sn
Thermal Conductivity (1420°C)	W/cm-K	0.6	0.55
Electrical Conductivity (1420°C)	μΩ-cm	81	77
Emissivity (calculated) (1420°C)		0.22	0.22
Vapor Pressure (1420°C)	torr	.05	6

The thermocouple probe design, shown in Fig. 8, was used throughout the program. The couple itself was an ISA Type B (Pt-30% Rh/Pt-6% Rh) chosen because of its excellent stability at high temperature. This couple has the added advantage of an essentially zero Seebeck coefficient at room temperature which obviates the need for either an ice bath or room temperature correction. As with all noble metal thermocouples, however, the sheath material is critical to maintaining calibration. In the present design, 99.8% pure alumina was used for all the ceramic parts, and little degradation was observed unless an actual crack developed in the protective cover. In practice, the lifetime of a given probe varied greatly. Some were found to last for hours of measurements in liquid silicon, while others would fail relatively rapidly from cracks in the protective cover. The reason for this variability has not been found.

The initial measurements using liquid tin at 1200°C showed a vertical temperature gradient of 2°C/cm or less near the melt bottom. Measurements near the melt surface were strongly weighted by immersion errors so that the surface gradient could not be determined. When the vertical measurements were corrected for the increased radiation loss at 1412°C, the measured gradients were in good agreement with the values calculated previously in the study contract.[14] Further, the measured difference between the melt temperature and the susceptor wall was also in good agreement with the calculated value.

Dwg. 6401A52

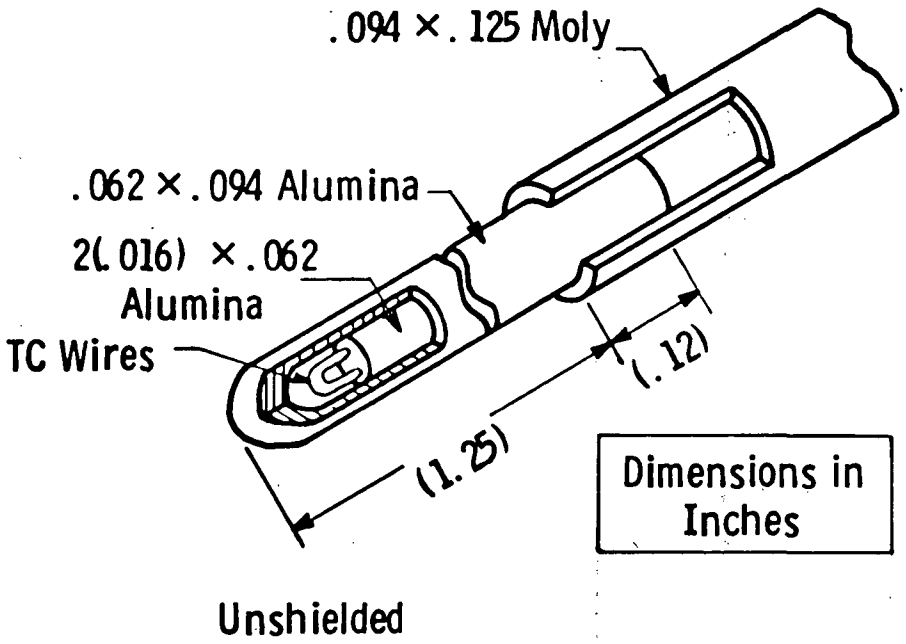

Fig. 8 — TC probe tips

Only a few measurements of the longitudinal temperature profile were taken during the initial thermal testing. These measurements indicated that the temperature distribution was relatively flat across the length of the melt and should have been conducive to the growth of wide web. The difference in temperature between the bottom of the melt and the center and at the end of the growth slot was only of the order of one degree; probing into the feed hole showed little difference from the temperature at the end of the slot.

Also among the initial measurements were steady state power and cooldown rates which could be combined to calculate the power factor of the configuration. It was found, for example, that the susceptor could be maintained at about 1000°C with a measured coil input of 118 volts and 34 amps. Also at 1000°C, the cooling rate was 0.725°K/sec. Using the mass of the susceptor as 4870 gm and a heat capacity for molybdenum of 0.313 J/cm-K, the heat loss is calculated to be 1105 watts. The power factor can then be found from the ratio of the measured heat loss to the volt-ampere product which in this case is 1105/4012 = 0.275. The same ratio was measured for several other temperatures and cooling rates so that is is apparently a constant of the system. Later measurements of coil voltage and current corrected by the power factor show that the actual power requirements of the system during web growth are only of the order of 2500 watts, although this depends on the details of the susceptor shielding.

3.3.2 Initial Growth Experiments

When the initial thermal testing had been completed, the initial web growth experiments were begun using a crucible/susceptor lid geometry very similar to that shown in Fig. 7. The first few runs were basically shakedown experiments to evaluate the mechanical and thermal properties of the system. For example, it was found that some sort of clutch mechanism was needed to permit moving the seed in and out of the furnace quickly. Initially, the set screw on the drive pulley was used to

release the reel, but later an electromagnetic clutch was installed on the drive motor.

The initial growth experiments also served to provide some experience in the seeding operation. During this critical phase of growth, human judgment is very important in deciding when the button has reached the proper size and how fast to begin the pull. The technique used for initiating web growth is basically very simple. First, the operator lowers the dendrite seed into contact with the melt and adjusts the temperature until the seed neither melts nor grows; this is the hold temperature. With the seed still in contact with the melt, the control temperature is now lowered an appropriate amount, usually 5 to 8°C. As the melt temperature drops, a button forms on the dendrite at the melt surface. The shape of this button depends somewhat on the size of the seed with an almost hexagonal button forming on a large (0.5 mm square) seed and a much more elongated button forming if the seed is very small (0.15 mm square). At this time, the operator judgment is very important; when this button had elongated to a width judged appropriate by the operator, the pull system is started. With the proper conditions, the two bounding dendrites propagate into the melt from the ends of the button and the web crystal grows between them as shown in Fig. 9. As the button emerges from the melt, it is generally much thicker than the final web, and the liquid must follow the surface of the button as it rounds over and thins down. If the pull speed is too large when this is happening, then the button will pull loose from the melt without forming a web crystal. Therefore, generally, the initial pull velocity is relatively slow, of the order of one centimeter per minute, and then increased to the appropriate growth speed once the web has formed. This seeding procedure was followed with only minor modifications throughout the program.

During this learning period, a number of short lengths of silicon web were grown and as experience in the seeding procedure and system characteristics was developed, it became apparent that there were

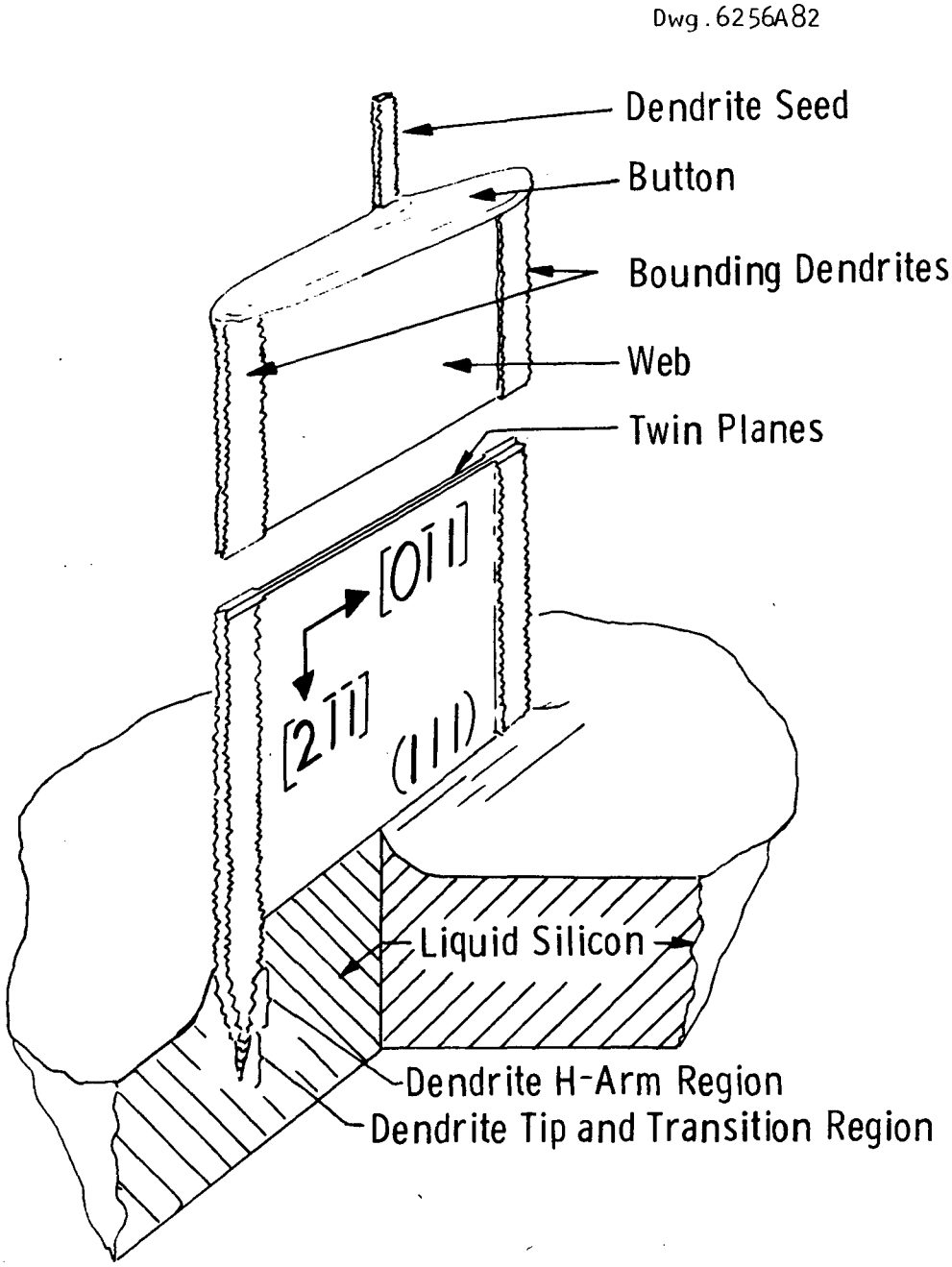

Fig. 9. Schematic section of web growth.

a variety of problems with the temperature distributions in the melt. In fact, identifying and modifying the temperature distribution in the silicon melt has been a major activity during the whole program.

The principal thermal problem encountered during the initial operation of the apparatus was the spontaneous freezing of the melt at the crucible wall. The obvious and immediate conclusion was that the temperature on the silicon in contact with the quartz crucible was too cold, and a number of system modifications were tried to remedy the condition. The work coil position could be adjusted during the course of a run and this was used to make some modifications in the susceptor temperature. The coil adjustments helped to some extent, but were not sufficient to solve the problem and segments of the alumina radiation baffles surrounding the susceptor were removed or augmented to alter the susceptor temperature. The overall result was a distinct improvement in the ability to grow web, but there were still obvious problems with the thermal geometry.

In addition to the thermal problems, another major problem became evident as soon as runs were made with silicon in the crucible: the accumulation of silicon oxides on various critical parts of the system. The liquid silicon reacts with the quartz crucible according to the reaction $Si(\ell) + SiO_2(s) \rightleftarrows 2SiO(g)$, and the SiO evolves as a vapor which deposits on colder areas of the system. Some silicon vapor is also present, and the resulting deposit can be either soft and powdery or hard and dense depending on the conditions of formation. In some instances, the oxide deposits would completely cover the growth slot in the susceptor lid. Even if the slot were not completely blocked, however, the presence of the oxide was found to seriously alter the temperature distribution in the melt, presumably by changing the heat loss characteristics of the susceptor lid.

As a first attempt in solving this oxide problem, the oxide in the slot was simply pushed into the melt with a quartz rod, with the

hope that it would evaporate; this was not too successful. Better results were obtained using a quartz tube with suction to remove the oxide flakes from the lid. After some experience with this method, it was possible to remove the accumulated oxide without dropping any into the melt, and it was then found that the freezing problems were greatly reduced. Evidently, the oxide particles act as a catalyst for nucleation and/or create local cold spots through their high emissivity. Whatever the reason, solid flakes of oxide on the melt greatly enhance freeze-out.

During this initial testing period, two additional observations were made which proved to have great significance later. First, dendritic web crystals that were apparently growing without difficulty would suddenly pull free of the melt. Second, as the button was forming on the seed, it would sometimes seem to shrink rather than grow; in one instance a button actually seemed to oscillate. Based on these observations, it was concluded that some sort of temperature fluctuations were present in the melt although there was no evidence of significant temperature fluctuations in the control temperature. This conclusion was verified when an alumina sheathed thermocouple was used to probe a silicon melt and temperature fluctuations of about $\pm 1°C$ or more were observed. The probing of the melt also verified the existence of an asymmetric temperature distribution.

At this time, it was concluded that much more detailed knowledge of the temperature distribution in the system was necessary and provisions were made for the required thermocouple penetrations. This point marked a significant change in the approach to the development program. Until then, most of the changes in the system had been made in response to observations on the growth of the dendritic web crystals with only limited temperature measurements for guidance. After this point, temperature measurements in the susceptor and in the melt itself were used as the major guide for system development, although observations of crystal growth behavior were also important. The major advantage was that crystal growth behavior could be correlated with quantitative data on the temperature distribution in the melt, a feature that had never before been available in any dendritic web development program.

3.3.3 Advanced Thermal Testing and Growth Experiments

It was evident that the thermal geometry of the system was of prime importance for web growth and when it became apparent that significant thermal asymmetries were present in the growth system, an extensive temperature measurement program was undertaken to determine the magnitude of the problems and ascertain the causes. The susceptor and the lids were modified by drilling a series of eight thermocouple probe holes around the periphery according to the plan shown in Fig. 10. Matching penetrations were provided in the test plate adapter for the top access port cover and an additional five penetrations were provided for measurements in the melt. The thermocouples used for the measurements were the same design shown in Fig. 8.

Most of the measurement runs were devoted to an evaluation of the temperature profile in the periphery of the susceptor without silicon present in the system. By so doing it was possible to make two runs per day with sufficient time between runs to cool the system and make the necessary changes in the susceptor and shielding configuration. Then, when some significant result had been achieved, a crucible and silicon were added and the profile in the melt was checked as well.

The first result of the measurements was the discovery of a strong asymmetry in the temperature profile along the length of the susceptor. When the work coil position was adjusted to match the end temperatures and the corresponding front and back temperatures, then the minimum temperature was shifted to one side of the center. By making a series of runs in which various components of the susceptor assembly were reversed, it was found that the problem arose from heat losses in the three legged kinematic support of the susceptor. When thermally insulating alumina plugs were used in the ends of the support rod, the temperature asymmetry essentially vanished. Even so, the center of the susceptor was still 9 or 10°C colder than the ends, and additional thermal trimming was done by removing portions of the alumina radiation baffles at the ends of the susceptor. This approach finally yielded a temperature profile that was uniform within 2°C around the periphery of

WESTINGHOUSE ELECTRIC CORPORATION

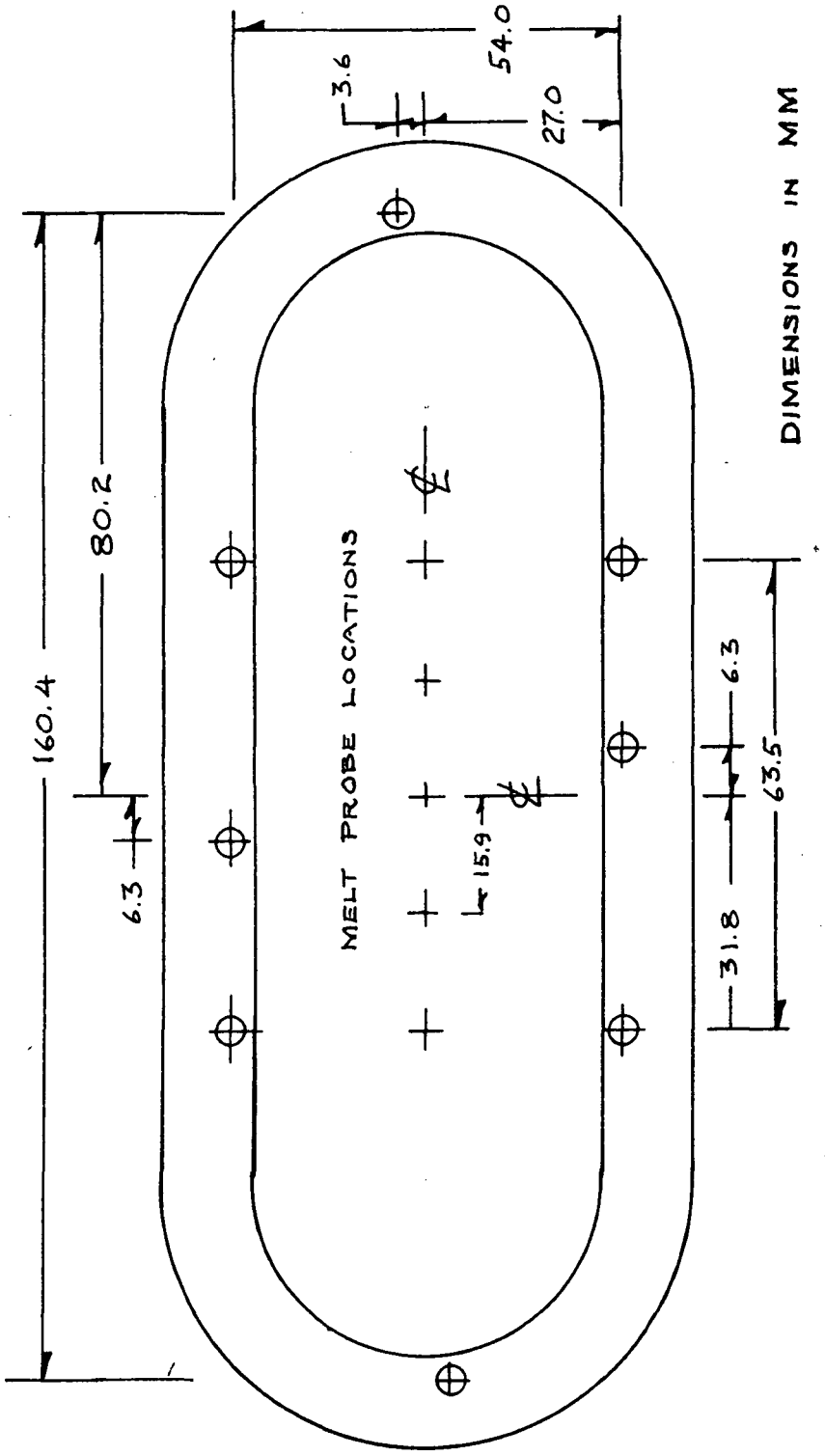

FIGURE 10

the susceptor. Vertical measurements in the probe holes confirmed the existence of a relative constant vertical temperature profile, although this could be modified somewhat by changing the elevation of the work coil.

This series of temperature measurements also verified the suitability of pressed and sintered molybdenum for use as susceptor material. It was first suspected that the temperature asymmetries might be due to inhomogeneities in the pressed and sintered molybdenum bar used to fabricate the susceptor. Accordingly, a susceptor was fabricated from a piece of arc cast material and this susceptor was used for the majority of the tests. Near the end of the series, however, the original pressed and sintered susceptor was retested and found to be essentially the same as the arc cast susceptor.

One material change was identified during this test series; the alumina used for the radiation baffles. Originally, these baffles were fabricated from 96% pure alumina ceramic and cracking of the baffles due to thermal strain was a serious problem during the early portion of the program. Although the baffles could be reassembled between runs, there was always some concern that the thermal conditions were really reproducible. Finally, new baffles were fabricated from high purity (99.8%) alumina ceramic. In addition, slots were cut in the baffles to minimize strain buildup. This combination proved to be very satisfactory and cracking of the ceramic baffles is no longer a serious problem.

A system change was also made during the test series. The control temperature sensor, a Type B thermocouple similar to the probe thermocouple, opened up and rather than replace it with a thermocouple, a radiation sensing unit was installed. Although the absolute calibration of this type of sensor is very poor, its differential sensitivity is much higher than the thermocouple; approximately 9°C/mV vs 90°C/mV for the Type B couple. Since the system is calibrated internally by the establishment of a hold temperature, the lack of absolute calibration in the sensor is no problem. Changes in the system temperature can be readily calculated using the relation

$$\Delta T = \frac{T_m}{4E_m} \Delta E$$

where T_m is the melting temperature of silicon (1685°K), and E_m is the sensor output at the hold temperature (assumed to be the melting temperature of silicon).

The only problems with the radiation sensor occurred as the result of mechanical instability of the sapphire rod light pipe. Relative motion between either the light pipe and the susceptor or the light pipe and the sensor head would cause a fluctuating signal which resulted in poor temperature control. If care were taken to maintain mechanical stability in the assembly, then the short term and even the long term temperature stability of the system appeared to be excellent.

Susceptor Lid Effects. Although a symmetric and reasonably flat temperature profile in the susceptor itself appears to be a requirement for achieving a symmetrical temperature profile in the melt, the effect of the susceptor lid configuration is perhaps even more important. The temperature distribution in the lid and the general shape of the growth slot in the lid determine heat loss pattern from the melt surface which in turn plays an important role in determining the temperature distribution in the liquid.

The design of the susceptor lid went through three distinct phases. In the initial months of the program, the lid was very similar to the conceptual design shown in Fig. 4. The lid was a rather complicated multi-layered assembly of thin molybdenum sheet and even thinner molybdenum foil. During the initial growth experiments, some modifications were made such as removing the "after shields" which projected above the top of the lid, but the basic assembly was much the same.

The principal problem with the initial lid design was the excessive accumulation of oxide in the growth slot. It was reasoned that if the edges of the slot were to run hotter, then the oxide might not condense as readily. This reasoning led to a new design which was

introduced almost concurrently with the thermal measurement program just discussed. The new design utilized a three-layer assembly of 1.5 mm thick molybdenum plates with thinner molybdenum foil interstitial shields in some cases. It was reasoned that the thicker molybdenum would be heated inductively to some extent at its periphery and would conduct the heat into the slot. Each layer had a larger slot than the one below to move it out of the gas flow and thus reduce the chance for oxide accumulation. The design proved to be moderately successful and indeed oxide problems were markedly diminished but not eliminated. Further, some reasonably flat, symmetric temperature distributions were obtained in the melt by adjusting the slot size and shape.

Unfortunately, oxide accumulation on the slot proved to be a continuing problem, albeit much reduced from the original design. Good web growth conditions could be obtained only to be spoiled by oxide flakes falling into the melt followed by freezing problems.

The most recent and most highly successful lid design utilized a heavy (6.3 mm thick) cover for the susceptor with one or two 1.5 mm thick top shields. With this configuration, the inductive heating of the lid plays an important role. The elevation of the work coil affects the coupling to the lid and hence provides a useful parameter in adjusting the thermal conditions. The slot itself runs at a sufficiently high temperature that oxide rarely if ever accumulates. The combination of higher lid temperature and minimal oxide accumulation have practically eliminated melt freezing as a problem.

Unfortunately, each major design change in lid design undid a large portion of the thermal shaping development which preceded it. As problems with oxide accumulation were solved, new thermal design efforts were required to reachieve the melt temperature profiles achieved with previous designs. Nevertheless, as the program progressed, a better understanding was developed as to the effects of various parameter changes, and a variety of techniques were developed for modifying the melt temperature distribution in a logical manner. For example, the

length of the slot plays an important role. In one set of experiments, three lids were fabricated from the 6.3 mm molybdenum plate; each lid with a slot of different length as shown in Fig. 11.

When the lid with the shortest slot was used, a temperature profile similar to that shown in Fig. 12a was obtained. The temperature distribution is reasonably symmetrical, however the deep central minimum is not conducive to the growth of web much over 10 mm wide, and the temperature fluctuations resulting from the flow of hotter material from the edges to the center cause problems with the web pulling out. Conversely, when the lid with the longest slot was used, the temperature profile shown in Fig. 12b was measured. Now, the center of the melt was the hottest region of the liquid and in principle, the web should widen easily. In fact, growth was hampered by the melt freezing out at the ends of the crucible. When the lid with the intermediate slot was tried, the ends of the melt were still too cold, however the melt profile could be adjusted by covering the "dog-bone" holes with 1.5 mm thick trimming plates. When these were adjusted properly, the melt profile shown in Fig. 12c was measured. This profile was conducive to the growth of reasonably good web crystals, but it can be seen that the distribution is slightly asymmetric and could be slightly flatter, or preferably slightly humped in the center.

One final technique for shaping the temperature in the melt was the use of radiation ports in the bottom of the susceptor. Two 12.6 mm dia. holes spaced 25 mm either side of center were drilled in the bottom of the susceptor. Matching holes were drilled in some of the shields at the bottom of the susceptor. The heat loss from the melt above these holes produced a localized dip in the temperature profile, however additional work is needed to evaluate the effects on growth.

The temperature profile shaping efforts can be summarized by saying that a number of practical techniques have been developed to modify the temperature profile in the melt. As can be seen from Fig. 12, extreme conditions can be produced, and the remaining problem is to tune the

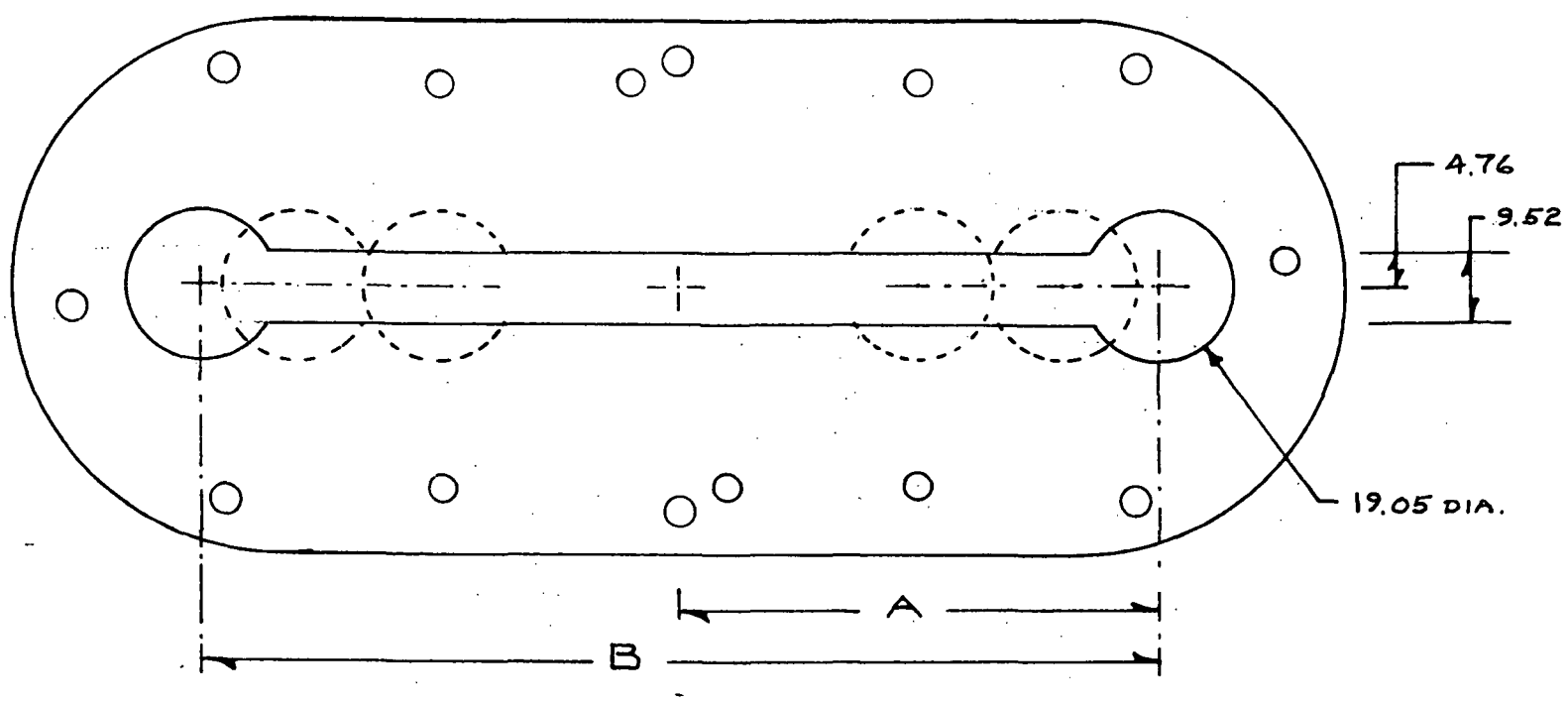

LID	A	B
T-1	31.8	63.5
T-2	50.8	101.6
T-3	63.5	127.0

mm

FIGURE 11. HEAVY LID LAYOUT

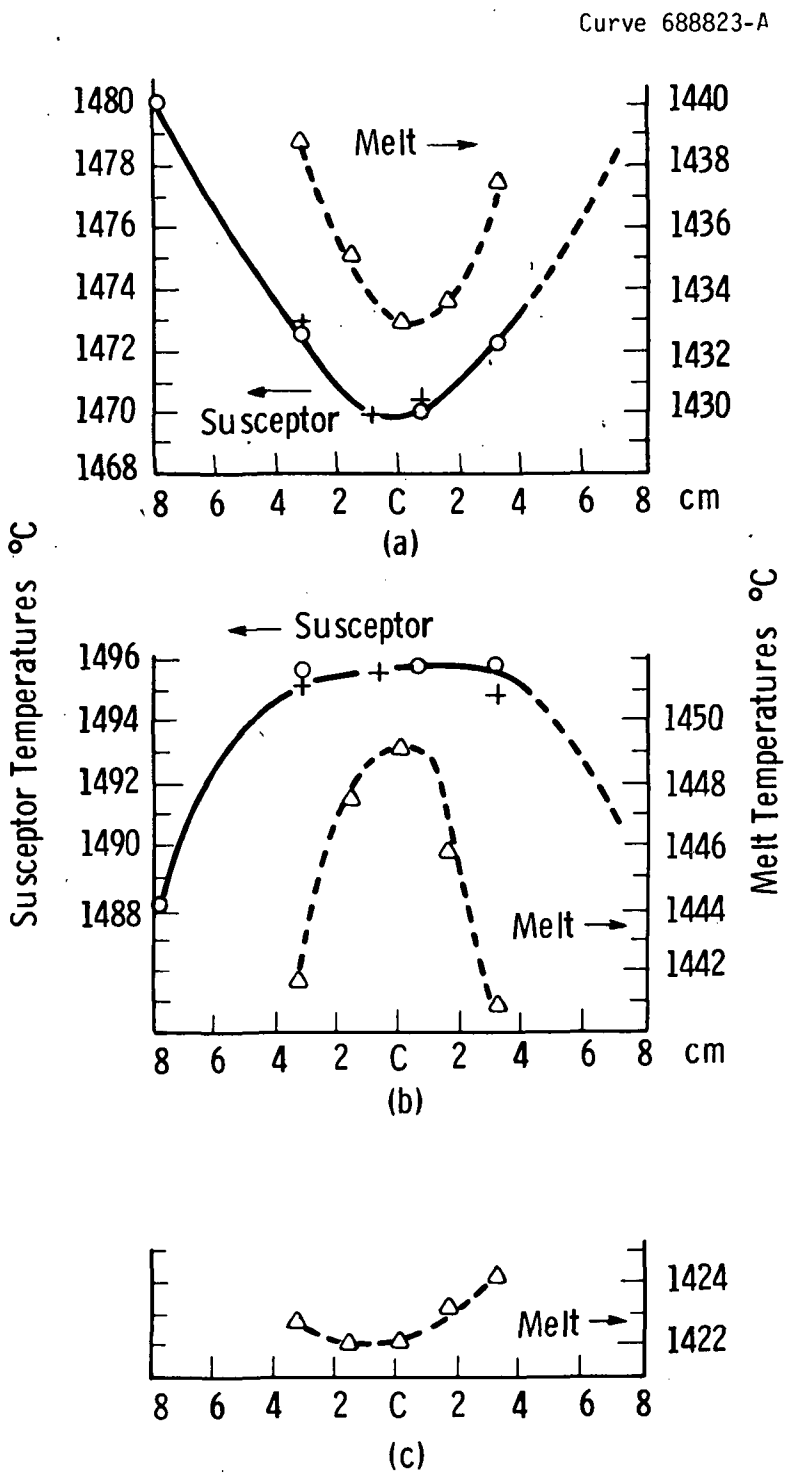

Fig. 12 — Temperature distributions for susceptor and melt

system to achieve the desired intermediate profile. There is good evidence that once the proper configuration is obtained, then it is reproducible from run to run, especially when such variables as oxide build-up are eliminated.

Melt Effects. The temperature measurements and the concommitant growth experiments identified a third factor which must be considered, including simply the size of the melt. When the initial system design was being considered, it was realized that the growth of dendritic web of markedly increased width would require a larger melt than had been used in previous web growth work. Growing wide, uniform ribbons would require a melt with a uniform temperature distribution over a region commensurate with the web itself, and hence a melt several times as wide as the widest anticipated crystal. If the earlier round systems were simply scaled up, this would imply a quartz crucible approximately 15 cm in diameter with a commensurately massive susceptor or heater. The elongated shape chosen for the present design is much less massive than this, but nevertheless does have a crucible of the order of 15 cm in the long dimension.

It is suspected that this simple increase in size of the system may be the main cause of the unstable convective flow which generates the observed temperature fluctuations. The Rayleigh number, a measure of the convective behavior of a fluid, is linear in temperature difference but depends on the cube of distance. This may offer an explanation as to why temperature fluctuations of ± 0.1°C or less were observed in a different growth furnace having a 5 cm diameter crucible, although the maximum temperature differences in the small system must be within a factor of two or three of those existing in the larger system. It must also be observed that web growth in the small system appeared to be much more stable and less plagued by "pull out" problems than growth in the larger system.

In principle, the convective flow in the liquid could be reduced by eliminating any temperature differences in the crucible. This

is obviously impractical in a dendritic web growth system since the liquid in the vicinity of the web must be supercooled while the liquid at the crucible wall should be above the melting temperature to avoid nucleation problems. Further, in the present system, there should be a region in the liquid hot enough to melt the feed material used to maintain the melt level. The answer to this dilemma seemed to lie in isolating different regions of the melt with quartz vanes or baffles to interrupt the convective flow patterns.

Several different baffle configurations were investigated in an attempt to reduce the undesired convective flow. The final configuration is shown schematically in Fig. 13 in which both crosswise and longitudinal baffles are used to generate a sort of submerged box underneath the growing web. It was found that neither the crosswise baffles nor the longitudinal baffles alone had much effect on the temperature fluctuations. The combination of baffles, however, reduced the measured fluctuations from about ± 0.8°C to about ± 0.3°C in the best circumstances. Even with the baffles, however, it was necessary to achieve a symmetrical (if not flat) temperature profile in the melt to obtain the maximum reduction in fluctuations.

The melt depth as well as the length and width also seemed to have some effect on the ease of web growth. The exact mechanism is not clear since as with many practical factors involved with web growth, changing the melt depth changes a number of other parameters as well. When the semicylindrical crucibles are used, changing the melt level also changes the melt width and to some extent the length. It also changes the distance between the melt surface and the lid, a parameter of considerable importance in controlling both the heat loss from the growing web and the vertical gradient in the liquid near the web.

It was not really possible during the course of the experiments to completely separate the importance of the various effects caused by changing the melt depth. Nevertheless, it appeared that it was easier to grow web from a shallow melt. In an effort to separate the effect of the

WESTINGHOUSE ELECTRIC CORPORATION

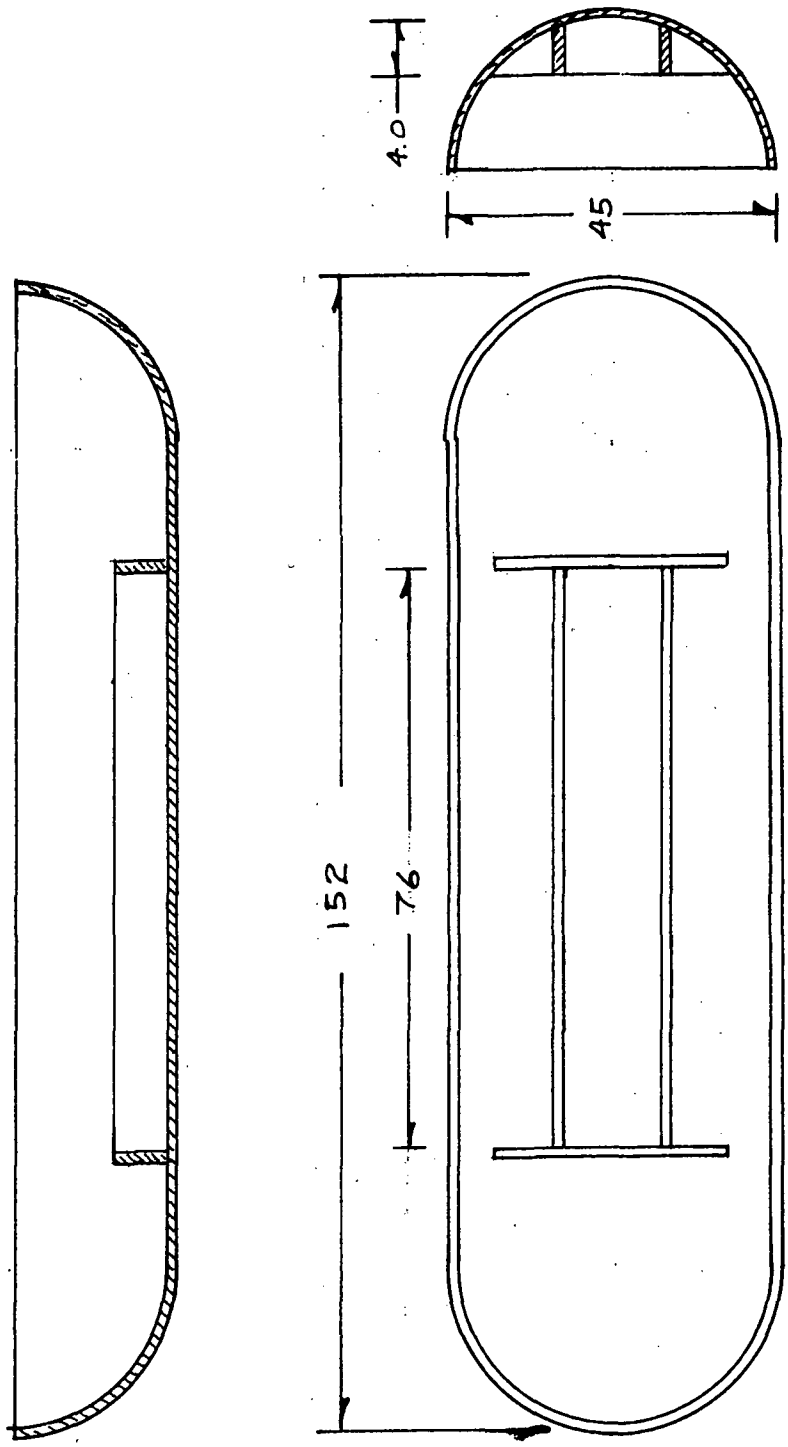

FIGURE 13. BAFFLED CRUCIBLE

liquid depth from the effect of the liquid to lid distance, a new crucible and susceptor combination were evaluated. Instead of fabricating the crucible from round tubing, the crucible was fabricated from square quartz tubing. Although the width of the rectangular crucible was about the same as that of the older style semicircular cross section boats, the length was about 5 cm shorter in order to accommodate the square ended boat into the round ended susceptor. The system is shown schematically in Fig. 14.

The new crucible/susceptor design gave web growth results which were better than had been previously achieved. On a number of occasions web crystals about two meters long and up to 24 mm wide were grown. Again, it seemed that the growth was best when the melt was relatively shallow, about 6 mm deep. This presented a problem with long pulls; when the melt became too shallow, surface tension effects would cause the silicon to pull away from one end of the boat which terminated the run.

So far, the temperature distribution in the flat bottomed crucible has not been optimized. The measurements are a little more difficult than with the round bottomed crucible because the shallow melt depth increases the thermocouple immersion error. For the same reason it is not obvious whether or not the temperature fluctuations have been reduced; fluctuations of about ± 0.7°C have been observed, but they could be partly the result of fluctuating heat losses from the thermocouple stem due to gas flow.

Melt Replenishment Experiments. The development work on melt replenishment was much less extensive than had been originally planned. It was felt that good web growth conditions should be achieved before actual melt replenishment studies should start and unfortunately, the proper growth conditions were only beginning to be achieved near the end of the program. Nevertheless, some preliminary experiments on melt replenishment were conducted with very encouraging results.

Initially it was planned to use thin silicon starter rods as the feed material. These rods are used commercially in the reduction of

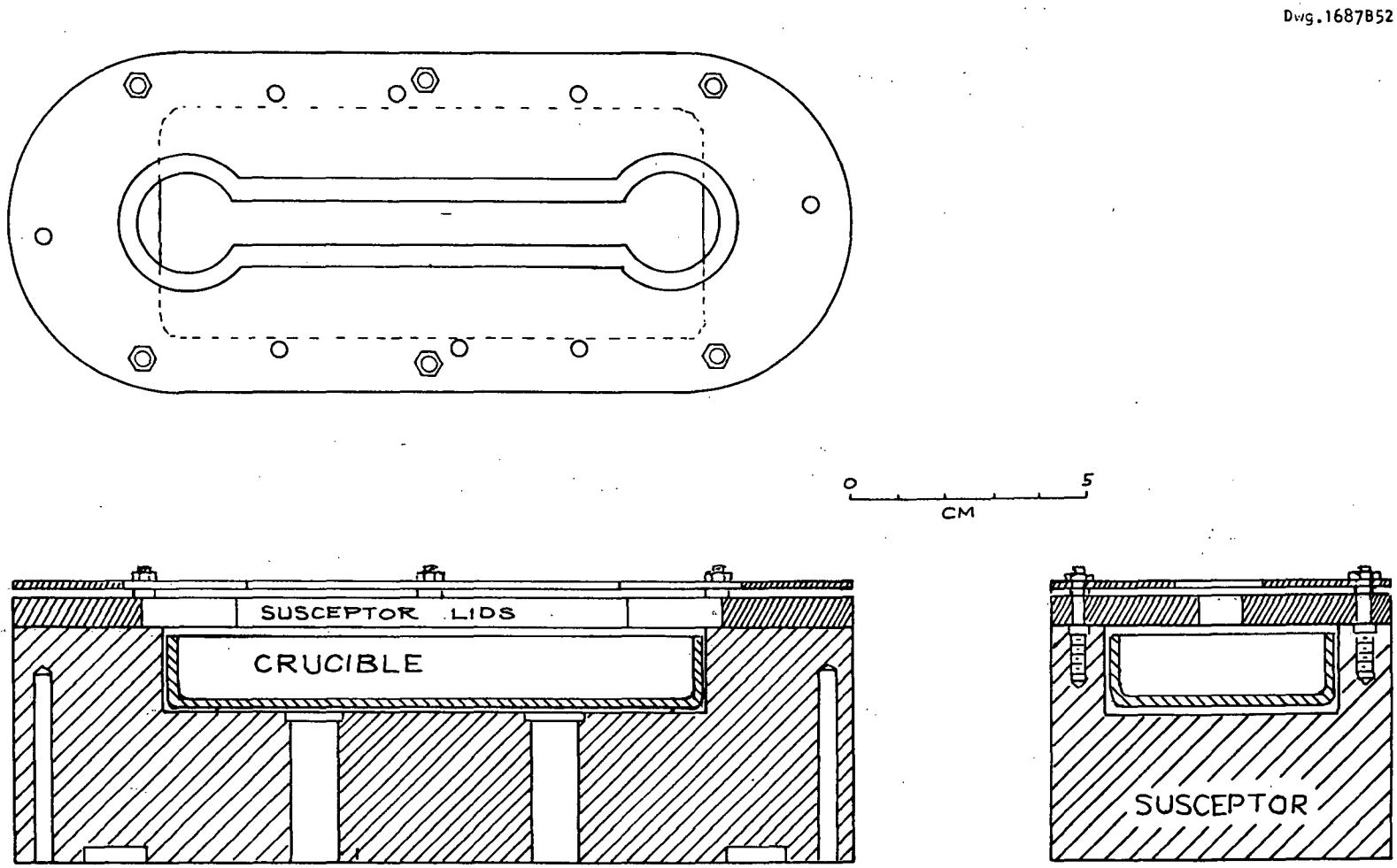

Fig. 14. Flat bottom crucible assembly.

purified silicon compounds to produce semiconductor grade silicon. It was found, however, that this material was not as readily available as was first thought, and the feed experiments were performed using 3 mm square rods cut from polycrystalline silicon bars.

The actual feed mechanism worked very well. The motor drive lowered the feed material through the lid without any problems. The actual feed while growing operation was not quite so successful. When the melt temperature was appropriate for web growth near the center of the melt, the ends of the melt were not quite hot enough to melt the feed stock. Nevertheless, it was possible to grow web crystals while the feed rods were in the melt; the presence of the feed rods did not cause excessive freezing as was feared. This would indicate that the thermal conditions were very nearly correct. It is felt that the major problem was excessive heat loss up the feed rod and if a preheater had been used, this heat loss would probably have been reduced sufficiently to permit feeding.

Another possibility would be to use feed material in the form of pellets or chunks. If material were added in this form, then there would not be a steady state heat loss through the feed stock and the existing thermal conditions might have been adequate. Some technique using discrete feed material is probably the direction for future development in any case.

Some problems were also encountered with the melt level indicator. The electronic balance that weighed the crucible assembly gave somewhat erratic readings. It could not be determined whether this was due to mechanical problems in the linkage or whether it was due to electromagnetic effects such as interference from the 10 kHz power lines or actual levitation of the susceptor. There was, however, some indication that the balance mounting plate was not stiff enough, and if this method of sensing is continued, care should be taken to improve the mechanical rigidity of the assembly.

4. RESULTS

During the course of the program a variety of results were obtained both in the form of material and in the form of technical information. The material aspects included both the growth facility itself and the web crystals grown in it. The technical information consisted of a great improvement in the understanding of the practical requirements of the dendritic web growth process.

4.1 Material Results

The web growth system developed on this program has proven to be extremely satisfactory. The system was designed with the emphasis on versatility and as the program progressed, any required modifications were readily accomplished. There are a few modifications which should be considered in future systems, but they are of a minor nature such as the use of ball or roller bearings in the web take-up reel.

During the course of the contract, 81 growth runs were made with the apparatus constructed for the program. In most of these runs, dendritic web crystals were grown; initially, the crystals were only a few centimeters long, but at the end of the program, dendritic web material several meters long and up to 24 mm wide was grown. Some of the typical web crystals which were grown are shown in Figs. 15 and 16. Some of this material was fabricated into solar cells by personnel of the NASA-Lewis Research Center, and the resulting devices were equivalent in properties to cells processed at the same time from Czochralski grown silicon. These results would indicate that the apparatus is capable of producing high quality starting material for solar cell fabrication.

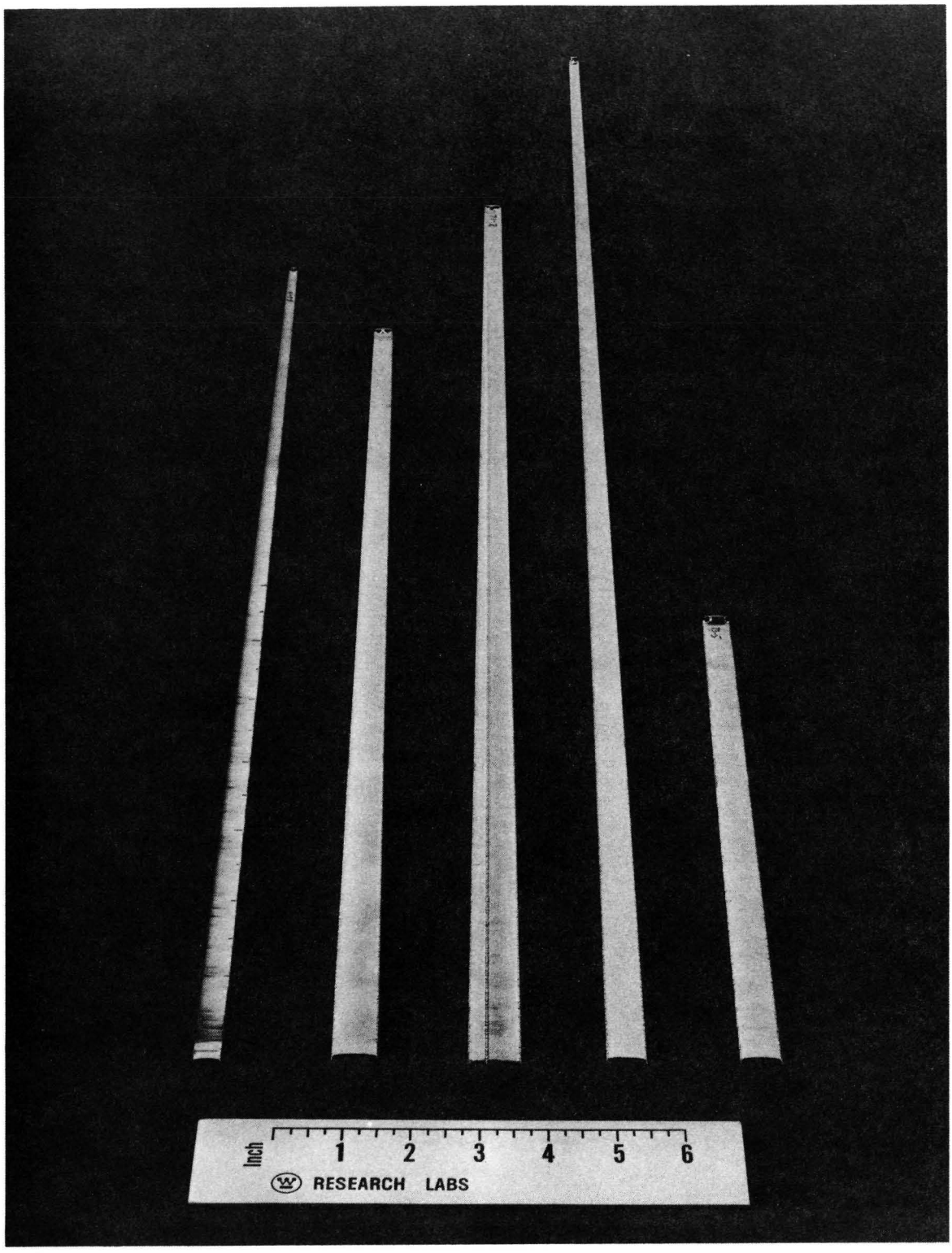

Fig. 15. Silicon dendritic web crystals.

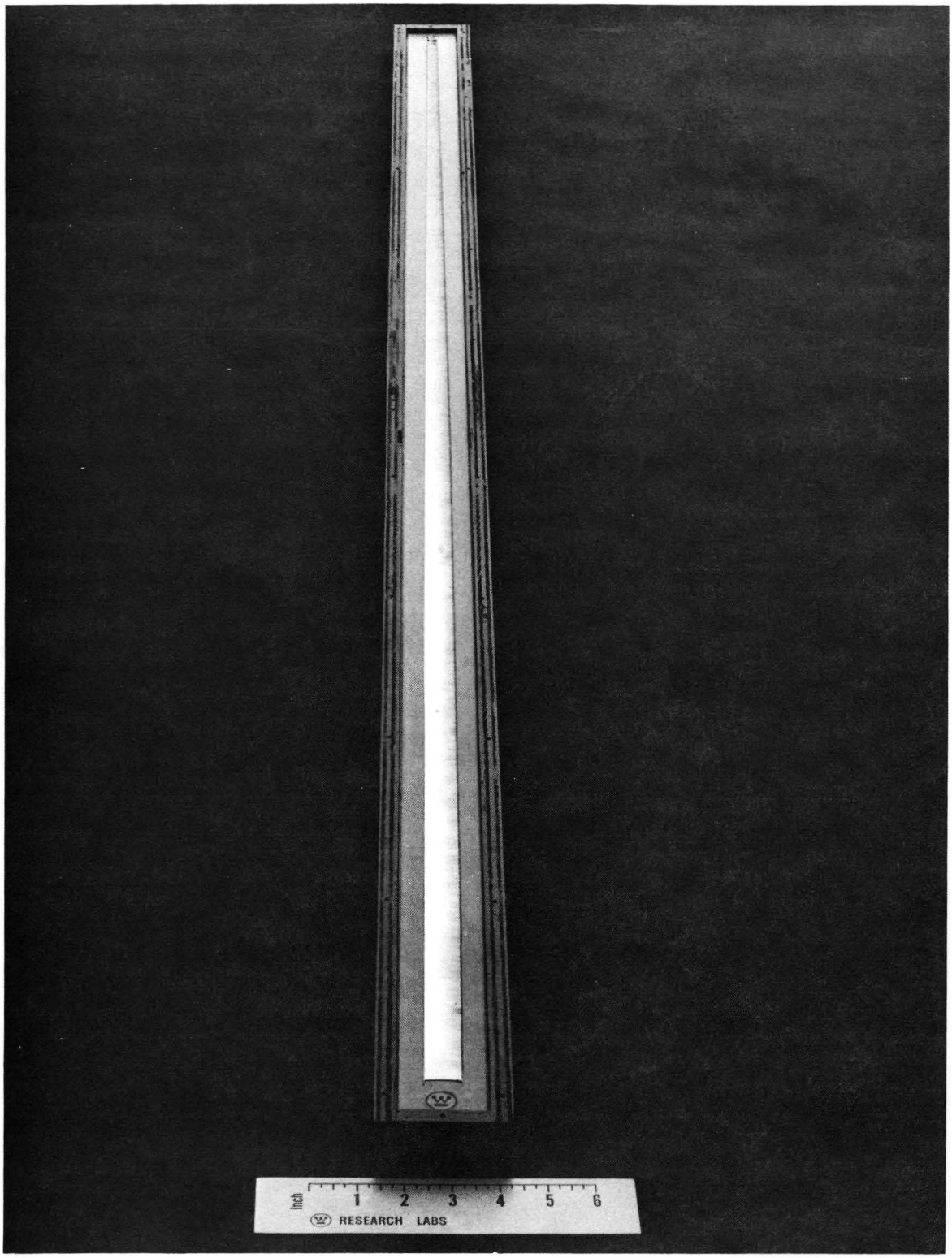

Fig. 16. Long dendritic web.

4.2 Web Growth Requirements

At the inception of the program, a more or less qualitative model of web growth had been developed.[14] Further, there was a body of knowledge available on the growth of web using the type of equipment employed for earlier laboratory and pilot line growth of dendritic web. While all this information was very useful, it was not sufficient to provide an understanding of the phenomena observed in the larger scale system under development. Further, quantitative requirements on the thermal conditions in the melt and in the regions near the melt were totally lacking. During the course of this program, a portion of the void was filled by generating data on temperature distributions in the melt and on the web growth behavior associated with them. In a separate, Corporate-funded program, a quantitative theoretical model of web growth was developed which aided in interpreting the experimental data.[15]

One of the most important growth requirements which was identified was a flat temperature profile in the melt in the plane of the web. If the web is growing in a thermal valley such as shown in Fig. 12a, then the widening of the web is strongly limited. As steady state growth is reached, the bounding dendrites are growing in balance with the lateral thermal field in the liquid. Not only does this limit the width of the web, but also any lateral motion of the thermal field, for example by thermally generated convective flow, can result in conditions where the bounding dendrite cannot propagate and the web will pull free of the melt. Experimentally, it was found that when the lateral thermal profile was flat to within about a degree over three or four centimeters, then the web growth was reasonably stable. Ideally, one would want a completely flat thermal profile over a lateral region of the melt commensurate with the width of the web being grown. At the edge of the flat region, the melt temperature should rise slightly to provide a bound on the width of the growing crystal.

A variety of design factors which influence the melt profile were also identified. Although the temperature distribution in the

susceptor is of obvious importance, the heat loss pattern through the slot in the susceptor lid is very critical. Of particular importance is the ratio of the heat loss at the ends of the slot (through the "dog bone" holes) to the heat loss along the length of the slot. Trimming the size of the "dog bone" holes can be used to trim the shape of the melt temperature profile.

Insofar as the temperature distribution of the susceptor itself is concerned, both the work coil position and the heat loss through the alumina radiation baffles can be used to modify the temperature distribution. If only an adjustment of the temperature symmetry is required, then the work coil position alone is effective. If an actual change of shape of the profile is required, then a modification of heat loss through the baffles is needed.

Unfortunately, all of these factors interact to some extent so that actually achieving a given desired temperature profile in the melt can be a long and tedious development effort. Once a given geometry has been chosen, however, the resulting temperature distribution is relatively stable.

An equally important requirement that has been identified is that the melt temperature should be free from temperature fluctuations greater than about 0.1°C. It is important to differentiate between the stability of the susceptor temperature and the stability of the melt temperature. Few if any problems could be traced to temperature control difficulties in the susceptor. Probe measurements showed temperature fluctuations of $\pm$ 1°C in the melt while simultaneously the susceptor temperature was fluctuating by only a few hundredths of a degree. These temperature variations in the melt are the suspected cause of many of the pull out difficulties and perhaps are also related to the generation of unwanted extra dendrites in the web.

The melt temperature fluctuations are undoubtedly related to thermally driven convective flow. Although in principle, this flow could

be eliminated by eliminating any temperature differences in the melt, some temperature differences are necessary in a web growth system. One region of the melt must be supercooled to support the growth of the bounding dendrites, while other regions of the melt must be above the melting temperature to avoid freeze out and to melt the feed material. In the present studies, one moderately successful approach for the elimination of convective flow was to interrupt the flow patterns with quartz vanes or baffles. It should be noted that since thermal convection depends on the cube of distance, the thermal fluctuation problem is much more severe in the present large system than it was in earlier systems which were about half the present size.

The program also identified a number of thermal factors which control the size and especially the thickness of the web crystals. It was found, for example, that with one particular crucible and susceptor geometry, dendritic web 200 μm thick could be grown at about 4 cm/min. With another geometry, that thickness web could be grown no faster than 2 cm/min. The difference lies in the dissipation of heat from the web and the effect of the lid geometry on that dissipation. In fact, some of the experimental data on web thickness vs. pull velocity were in reasonable quantitative agreement with the theoretical results of other studies.[15]

One final important result of the program was the realization that much of the complex control loop development originally envisaged is probably not required, even for extended growth runs. Three requirements for quasi-continuous growth have emerged: 1) Melt replenishment to maintain the liquid at an approximately constant ($\pm$ 0.3 mm would probably suffice) level; 2) Maintaining a constant temperature in the susceptor ($\pm$ 0.2°C should suffice); and 3) Maintaining a constant pull velocity. The constancy of temperature and pull velocity are more or less evident requirements, but the constanty of melt level serves two purposes. First, it serves to permit long lengths of material to be grown from a rather small crucible, and second it serves to maintain a constant thermal geometry in the system.

There are still some aspects of dendritic web growth which need further clarification, such as the generation of extra dendrites in a growing web. These so-called "thirds" almost always start at one of the bounding dendrites and seem to be related to the growth conditions and the thermal distribution in the melt. The "thirds" tend to form when the pull speed is increased, and also if the melt temperature profile has a strong minimum. On the other hand, when the melt configuration is conducive to long wide growth, then "third" formation is rare.

5. CONCLUSIONS AND RECOMMENDATIONS

5.1 Process Yield

The full yield potential of the silicon dendritic web process is not yet completely identified. Some of the key considerations are, however, better understood and remaining study and development needs can now be more clearly defined. This subject is discussed in the following three subsections.

5.1.1 Width Potential

This program has not thus far ascertained any inherent process limitations of web growth width within the range of the program goal of five centimeters. Furthermore, there are no apparent materials limitations in view of the fact that the refractory materials now used or intended for use have been found to have very long life and exhibit consistent, uniform behavior. Instead, width limitation, as regards the five centimeter goal or greater is apparently almost totally dependent upon the extent to which growth apparatus thermal design can provide conditions within the now reasonably well defined process requirements. The prospect for major improvement in attainable width to and beyond five centimeters is very good and depends strongly upon the level of effort and degree of success of future thermal design and development. The maximum width achieved during this program was 2.4 centimeters.

5.1.2 Growth Speed Potential

The relationship between growth speed and thickness is well recognized and can readily be determined experimentally for any given crucible/susceptor configuration. Fortunately, through thermal design mainly in the susceptor lid and upper heat shield area, the speed versus

thickness relationship can be modified to optimize speed as related to thickness. During this program, for example, one thermal configuration produced 8 mil thick web at a growth speed of 4 centimeters per minute. This is obviously not the obtainable maximum.

5.1.3 Thickness Potential

The presently achievable range of web thickness more than covers the apparent desirable thickness range as determined by current solar cell fabrication technology and by economic considerations. From the point of view of direct economic consideration of material cost only, the thinnest, hence fastest, possible web which could be grown, perhaps 2 mils, is most preferred. On the other hand, present solar cell fabrication technology limits the allowable thinness in at least two ways: 1) conversion efficiency dependence upon thickness, and 2) the ability to handle sheet material of extremely thin, hence fragile, dimension. Hopefully, future solar cell fabrication development combined with further web growth development will more accurately identify optimum web thickness for solar cell application.

5.2 Major Accomplishments and Problems

5.2.1 Accomplishments

The basic apparatus designed expressly for this program has performed well and provides a very high degree of versatility as required for process development purposes. More than eighty experimental web growth runs have been made without occurrence of any significant operating faults. The versatility of this system will be of continued high value to future development work. For example, the economic worthiness of resistance heating, as an alternative to induction heating, can be evaluated.

Much has been identified as regards cost effective design of growth apparatus requirements for future pilot production. This subject is discussed more fully in the following subsection 5.3.

The elongated crucible and susceptor design concept has been verified by experimental operation although its full five centimeter width capability has not yet been completely utilized. Elongated design was necessitated by not only the requirement of width capability to five centimeters but also the requirement of material feed capability during growth.

Silicon web grown in this system has been evaluated, at NASA-Lewis, and found to produce solar cells of equal solar conversion efficiency as compared to cells prepared from Czochralski grown material. It is thus apparent that solar cells produced from silicon grown in this system are of equal or greater solar conversion efficiency as compared to cells produced from silicon grown by any other process.

5.2.2 Unfinished Problems

The major continuing problem is that of providing adequate melt temperature distribution and sufficiently limited convective fluctuation for increasingly wider web growth. It is a proven practical fact that satisfactory thermal conditions can be provided with relative ease for narrow web growth without raw silicon feed capability. It is disproportionately difficult, however, in actual practice to provide adequate thermal conditions for increasingly wider web growth combined with raw silicon feed capability during growth. This is a problem which appears to call for further refinement of thermal design rather than a new solution in the strict sense. Although we are confident that a modest amount of improvement will reach the full five centimeter width of which this system is capable, it is difficult at this stage of development to predict the ultimate achievable width obtainable in practice. In future web development it is important to place the heaviest effort in this area of work.

Further development of the raw silicon feed aspect of web growth must also be emphasized. This program succeeded in demonstrating

the feed concept but did not achieve actual sustained feed to a practical degree. There are no apparent barriers to this development.

Although increased speed of growth was not a goal of this program, it is well recognized as a development area which affects the ultimate economic future of the process and should be emphasized in future work.

Finally, a variety of lesser equipment problems which require minor refinement can be routinely corrected during future development.

5.3 Recommendations for Prototype of Pilot Production Facility

Such a facility must, for capital investment reasons, be much simpler than the experimental apparatus developed for this program. The experimental apparatus intentionally maximized versatility and, as an undesirable consequence, also tended to maximize cost of construction. Obviously a prototype for pilot production should be designed from the opposite point of view; thus, a minimum of required features and a minimum resultant cost. Some simplified design features, as suggested by the results of this program, are clear; other considerations have been narrowed but are not yet sufficiently understood to suggest exact design requirements. The following subsections discuss the design requirements as best understood at the conclusion of this program.

5.3.1 Growth Chamber

The growth chamber and necessary external accessories can be greatly simplified for reason of cost effectiveness although not all requirements are yet clear for fully detailed determination. The growth chamber can probably be most economically made from a suitably sized water cooled cylinder with a minimum number of penetrations and viewports. Scavenging air from the system prior to heating can probably be satisfactorily done by a flowing gas purge or with a simple mechanical vacuum pump. If successful, such a design approach would eliminate expensive

high vacuum construction as was used in the facility intended for process development during this program. Simplicity of design can greatly enhance the effectiveness of a simple flowing gas purge by the avoidance of cavities with long, small cross-section purge routes and by the avoidance of highly porous absorbent materials such as graphite.

5.3.2 Storage Reel and Drive

A reel of non-adjustable width for web take-up and storage is suitable for all widths of web growth provided a tensioned fabric tape is fed onto the reel along with the web in a manner to cause the web to bend tightly onto the rim of the reel. The reel rotational drive should be powered by a remote-controlled continuously-variable speed gearmotor with a feedback loop to maintain constant speed at any rate setting within this range. Maximum motor speed should provide for a web withdrawal rate of about 15 centimeters per minute and the speed range ratio should be at least 100 to 1. A solenoid operated clutch should be included in the drive train to allow for manual positioning during start up and stored web removal. The motor control unit should have provision for inclusion within a thickness control loop if desired. Our present opinion indicates that a thickness control loop is not needed if a constant melt level is maintained because, in any given fixed thermal environment, growth speed is a very close and adequate determinant of thickness.

5.3.3 Bottom Cover Plate Assembly

A manually adjustable mechanism for positioning the work coil both vertically and horizontally during operation should be an integral part of the growth chamber bottom cover plate assembly. The bottom plate should also include a means for supporting the susceptor, crucible and shield assembly and should further provide at least two penetrations for temperature control and monitoring detectors.

5.3.4 Top Cover Plate Assembly

The top cover plate of the growth chamber must include a web withdrawal duct of suitable dimensions to minimize the flow rate of argon, or other protective gas, necessary to prevent backflow of air into the system. The growth chamber sidewall or the top cover plate should be fitted with web positioning guides which are adjustable from outside during growth. Provision to temperature sensors should also be provided.

5.3.5 Temperature and Dendrite Control

Temperature control apparatus must be equivalent to cost-effective systems used with modern silicon Czochralski growth units. The obtained control accuracy and long-term calibration drift for such a unit should be within the range of 0.1°C maximum variation. The unit should also be suitable for incorporation into a dendrite dimensional sensing control loop if later development indicates sufficient need for such a refinement. Present experience indicates that adequately precise and drift-free temperature control combined with constantly maintained melt level eliminates any practical need for a dendrite dimension sensing and control loop.

5.3.6 Melt Level Control

Maintenance of melt level is essential for long-term quasi-continuous web growth. To maintain a constant melt level for long periods of time some form of melt level sensing is mandatory. The arrangement built for this program includes an electronic balance system for sensing melt weight as an indication of melt level. This arrangement is sound in principle but did not perform well in the very limited use attempted during this program. It is not presently clear whether the operational problems experienced were caused by friction, electromagnetic levitation of the susceptor, electromagnetic pickup in the electronic balance circuit from the nearby induction field or, perhaps, some combination of these. Further development of this or an alternative melt level sensing method is necessary.

5.3.7 Raw Silicon Feed System

The form in which raw silicon feed material may ultimately and most economically be used is not apparent at this time. For the purpose of experiment and demonstration of feasibility small cross-section, approximately four square millimeter, polycrystalline rods have been used in this program. The apparatus which was developed lowers feed rods into the melt at rates determined either manually or by melt level automatic control loop. This feed system could also be readily adapted to small pellet feed. Definition of the feed system aspect of a prototype pilot production facility will eventually require a cooperative development effort including materials process and web growth technologies.

5.3.8 Thermal Design

The exact crucible, susceptor and heat shield thermal design cannot be specified at this time as this is the process area which needs the most intensive future development. The thermal design requirements are sufficiently known, however, to allow for selection of growth chamber as well as other component dimensions at this time.

5.3.9 Method of Heating

The method of heating used during this program was by ten kilohertz induction. This method offers many technical advantages and is ideal for process and apparatus development purposes. There is, however, considerable reason to believe that a resistance heating method can ultimately have economic advantage by reason of lower capital cost. Unfortunately, considerable development will be required to adapt resistance heating to this process; until such development has been successfully completed, our recommendation is, of necessity, for ten kilohertz induction.

5.3.10 Summary of Recommendations

It is now possible, but not necessarily desirable, to enter into a detailed engineering design of a prototype of a pilot production

facility for silicon dendritic web growth. Although several aspects of the design requirements are not yet precisely known, sufficient latitude could very likely be incorporated into the design that all presently uncertain options could be satisfied when final determination was made. But this approach is not without risk and in our opinion further process and apparatus development is the more prudent course of action.

REFERENCES

1. Billig, E., "Growth of Monocrystals of Germanium from an Undercooled Melt," Proc. Roy. Soc. A 229, 346-63 (1955).

2. Bennett, A. I., and R. L. Longini, "Dendritic Growth of Germanium Crystals," Phys. Rev. 116 (1) 53-61 (1959).

3. Hamilton, D. R., and R. G. Seidensticker, "Propagation Mechanism of Germanium Dendrites," J. Appl. Phys. 31, 1165-1168 (1960).

4. Faust, J. W., Jr., and H. F. John, "Germanium Dendrite Studies: I. Studies of Twin Structures and the Seeding Mechanism," J. Electrochem. Soc. 108 (9) 855-859 (1961).

5. Faust, J. W., Jr., and H. F. John, "Germanium Dendrites Studies: II. Lateral Growth Processes," J. Electrochem. Soc. 108 (9) 860-863 (1961).

6. Faust, J. W., Jr., and H. F. John, "Germanium Dendrites Studies: III. Dislocations," J. Electrochem. Soc. 108 (9) 864-868 (1961).

7. Hamilton, D. R., and R. G. Seidensticker, "Growth Mechanisms of Germanium Dendrites: Kinetics and the Nonisothermal Interface," J. Appl. Phys. 34 (5) 1450-1460 (1963).

8. Seidensticker, R. G., and D. R. Hamilton, "Growth Mechanisms in Germanium Dendrites: Three Twin Dendrites: Experiments On and Models for the Entire Interface," J. Appl. Phys. 34 (10) 3113-3119 (1963).

9. Smith, R. G., "A Study of Growth Processes in Germanium Dendrites Using Pulse Electroplating Techniques," J. Electrochem. Soc. 108 (3) 238 (1961).

10. O'Hara, S., "Dislocations in Webs of Germanium and Silicon," J. Appl. Phys. 35 (2) 409-413 (1964).

11. O'Hara, S., and A. I. Bennett, Jr., "Web Growth of Semiconductors," J. Appl. Phys. 35 (3, Part 1) 686-693 (1964).

12. Dermatis, S. N., and J. W. Faust, Jr., "Semiconductor Sheets for the Manufacture of Semiconductor Devices," IEEE Trans. Commun. Electron. 65, 195-200 (1963).

13. Barrett, D. L., E. H. Myers, D. R. Hamilton, and A. I. Bennett, Jr., "Growth of Wide, Flat Crystals of Silicon Web," J. Electrochem. Soc. 118 (6) 953-957 (1971).

14. Seidensticker, R. G., and C. S. Duncan, "Silicon Ribbon Study Program: Final Report," NASA CR-134821, June 1975.

15. Seidensticker, R. G., "Thermal Aspects of Dendritic Web Growth," Westinghouse Internal Report 76-1C4-SOLEP-R1.

APPENDIX A

DESIGN DRAWINGS

This appendix includes the Design Specifications ("D-Spec") and reduced copies of all the detailed drawings necessary for the fabrication and assembly of the Silicon Dendritic Web Growth Furnace.

ROUTING						
	FIREPROOF VAULT					

DRAWING LIST

INDEX	LINE	TITLE OF DRAWING	DRAWING NO.	MULTI-PLIER	ITEMS OR STYLE NO.	CHECKED	DATE CHECKED
	1	CHAMBER & FRAME ASSY	767JS93				
	2						
	3	CHAMBER BOX WELD'T	639F431				
	4	FRAME	639F434				
	5						
	6	BOX DETAILS	8504D21				
	7	COIL LIFT DETAILS	8504D35				
	8	COIL LIFT DETAILS	8504D41				
	9	COIL LIFT DETAILS	8504D42				
	10	TOP RL COIL LIFT Assy	8504D52				
	11	MID RL COIL LIFT ASS'Y	8504D53				
	12	BOT RL COIL LIFT ASSY	8504D54				
	13	WORK COIL VERT ADJ	8504D76				
	14	WORK COIL HORIZ ADJ	8504D77				
	15	CRUCIBLE POST DET	8504D98				
	16	COVER DETAILS	8506D46				
	17	COIL DETAILS	8506D56				
	18	COIL DETAILS	8506D58				
	19	DETAILS	8506D61				
	20	BALANCE DETAILS	8506D69				
	21	BALANCE ASS'Y	8506D70				
	22	CRUCIBLE SHLD & POST Assy	8506D75				
	23	CRUCIBLE & SUSCEPTOR	8506D79				
	24	CRUCIBLE & SUSCEPTOR Assy	8506D80				
	25						
	26	KNOB DETAILS	257C034				
	27	ROD HSG SUB-Assy	257C074				
	28	BACK COVER WELDMENT	257C251				
	29	COIL & ROUGHING PUMP Assy	257C261				

STOCK ORDER (1ST S.O. ON WHICH INF. HAS BEEN SENT TO SHOP) | IDENTIFYING DATA: IN SPECIFYING THIS D NO. ON A STOCK ORDER THE ENGINEER MUST GIVE: –

NAME OF APPARATUS

SILICON WEB FURNACE

ENGINEER S. DUNCAN

CHECKED BY AND DATE					
W. C. SUMPMAN	7-9-75	12-5-75			
DESIGN SPEC.	SUB. LETTER	SUB. LETTER	SUB. LETTER	SUB. LETTER	SUB. LETTER
D 902983	A	B			
WESTINGHOUSE FORM 6541 J	PAGE 1 OF 2	SUB. LETTER	SUB. LETTER	SUB-LETTER	SUB. LETTER	SUB. LETTER

ROUTING						
	FIREPROOF VAULT					

DRAWING LIST

INDEX	LINE	TITLE OF DRAWING	DRAWING NO.	MULTI-PLIER	ITEMS OR STYLE NO.	CHECKED	DATE CHECKED
	1	GEN. ASS'Y.	767J599				
	2						
	3						
	4	STORAGE REEL-DET.	8506D39				
	5	RIBBON GUIDE-DET.	8506D77				
	6	STORAGE REEL-DET.	8507D10				
	7	STORAGE REEL-DET.	8507D11				
	8	STORAGE REEL SUP.	8507D19				
	9	RIBBON GUIDE ROLL	8507D32				
	10	WEB WITHDRAWAL DT.	8507D33				
	11	FEED SPOOL HSG.	8507D50				
	12	FEED TUBE DET.	8507D52				
	13	FEED TUBE DET.	8507D63				
	14	DET'S.	8507D68				
	15	SUB. ASSY'S.	8507D69				
	16	SUB. ASSY'S.	8507D71				
	17	FEED TUBE SUB ASSY.	8507D97				
	18	DET'S.	8507D99				
	19	STORAGE RL. SUB ASSY.	8508D02				
	20	DET.	8508D18				
	21						
	22						
	23						
	24	ALT. STORAGE REEL	257C504				
	25	SUB.-ASSY'S.	257C334				
	26						
	27						
	28						
	29						

STOCK ORDER (1ST S.O. ON WHICH INF. HAS BEEN SENT TO SHOP) | IDENTIFYING DATA: IN SPECIFYING THIS D NO. ON A STOCK ORDER THE ENGINEER MUST GIVE: —

NAME OF APPARATUS

SILICON WEB FURNACE

ENGR. S. DUNCAN

CHECKED BY AND DATE					
W.C. SUMPMAN	12-5-75				
DESIGN SPEC.	SUB. LETTER	SUB. LETTER	SUB. LETTER	SUB. LETTER	SUB. LETTER
D 902983	A				
WESTINGHOUSE FORM 6541 J — PAGE 2 OF 2	SUB. LETTER	SUB. LETTER	SUB-LETTER	SUB. LETTER	SUB. LETTER

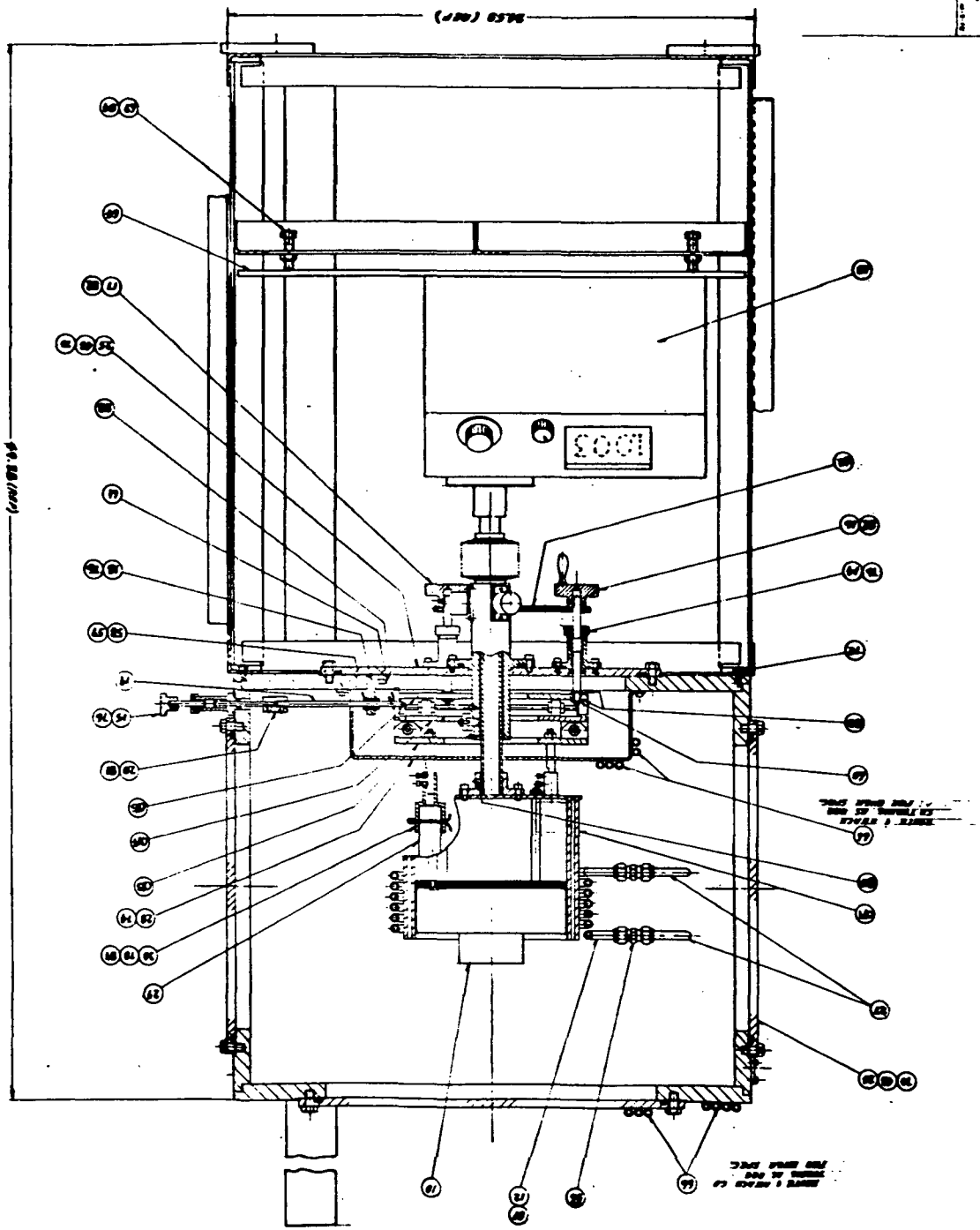

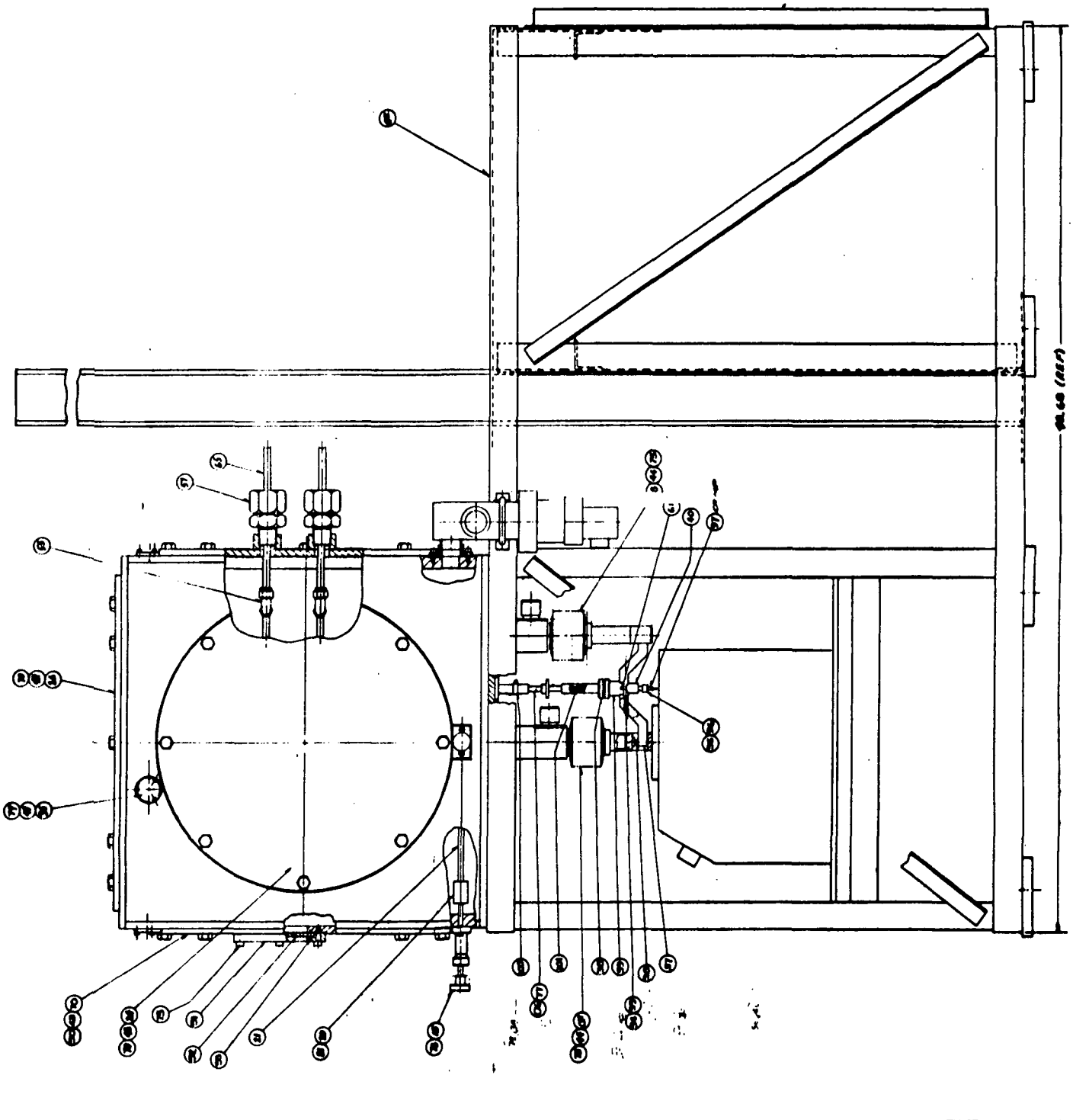

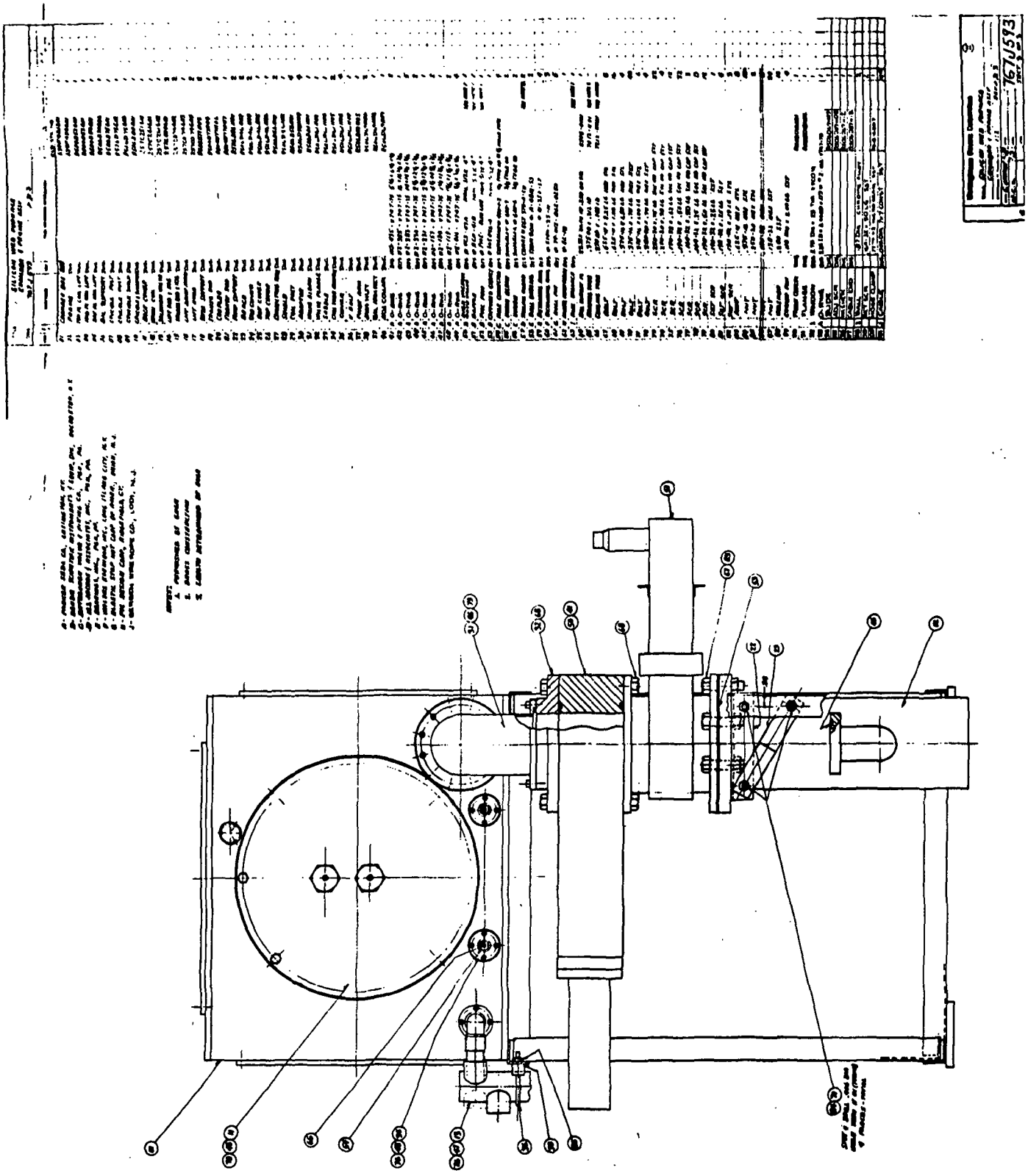

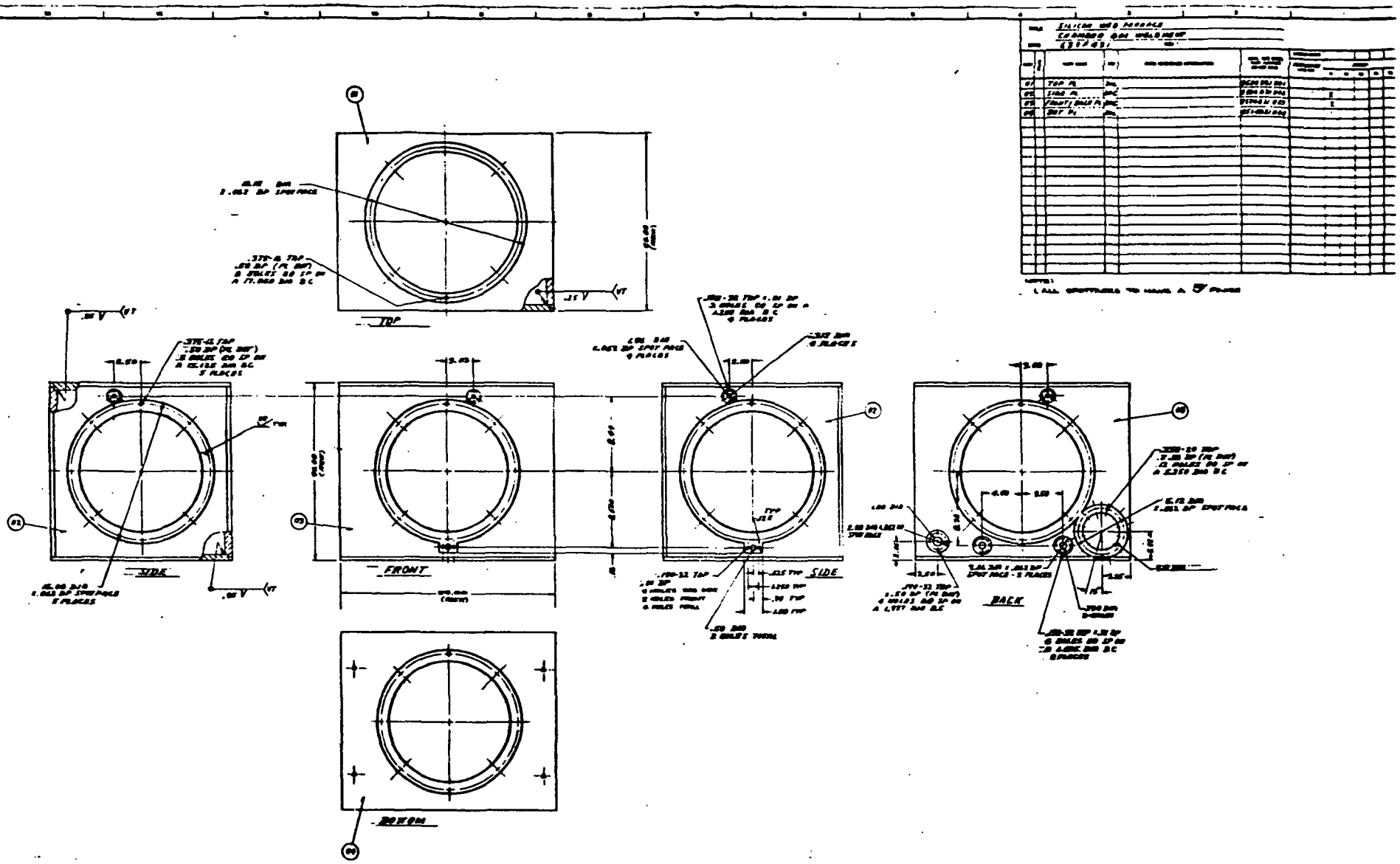

639E431

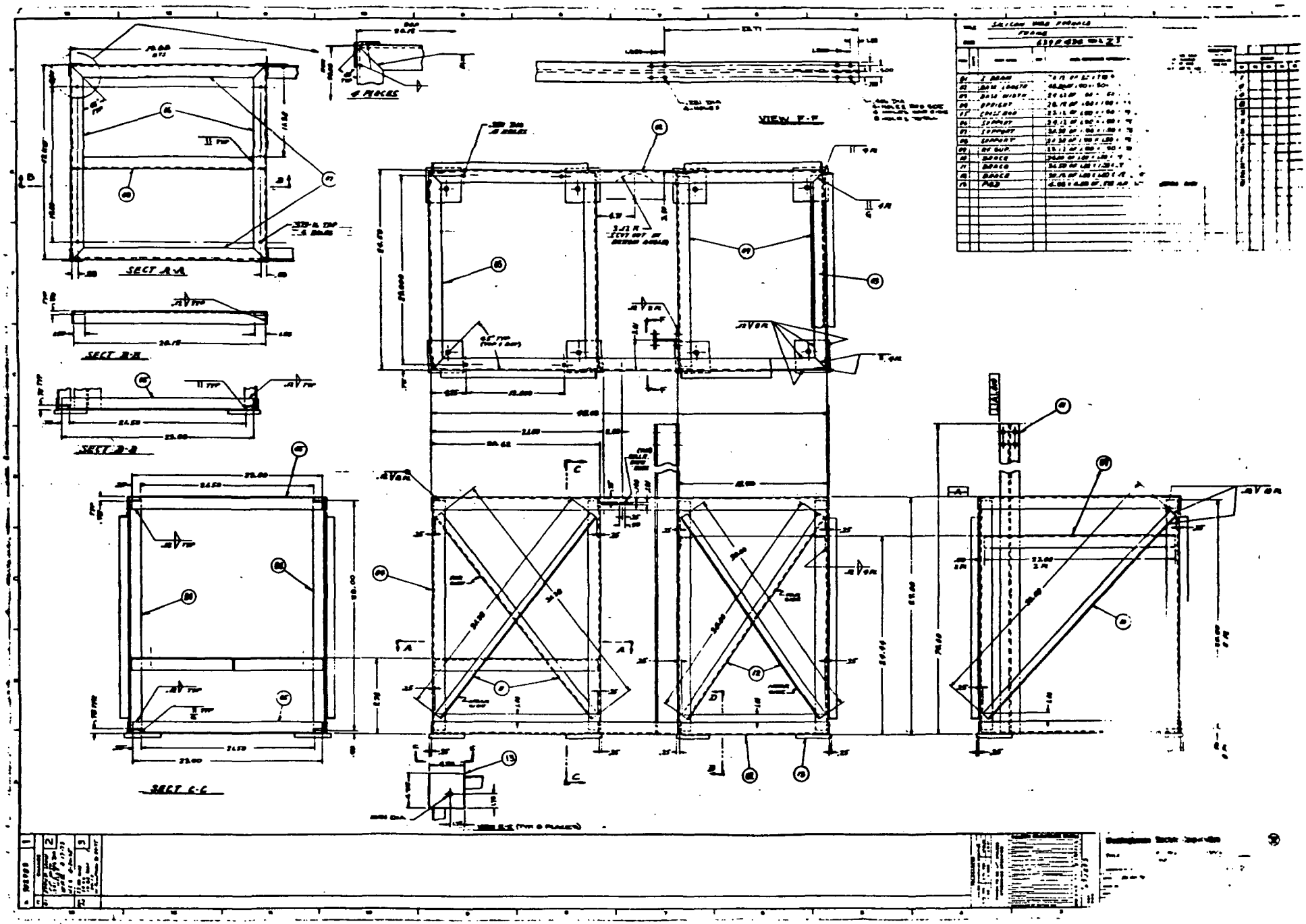
SECT A-A
SECT B-B
SECT D-D
SECT C-C
VIEW F-F

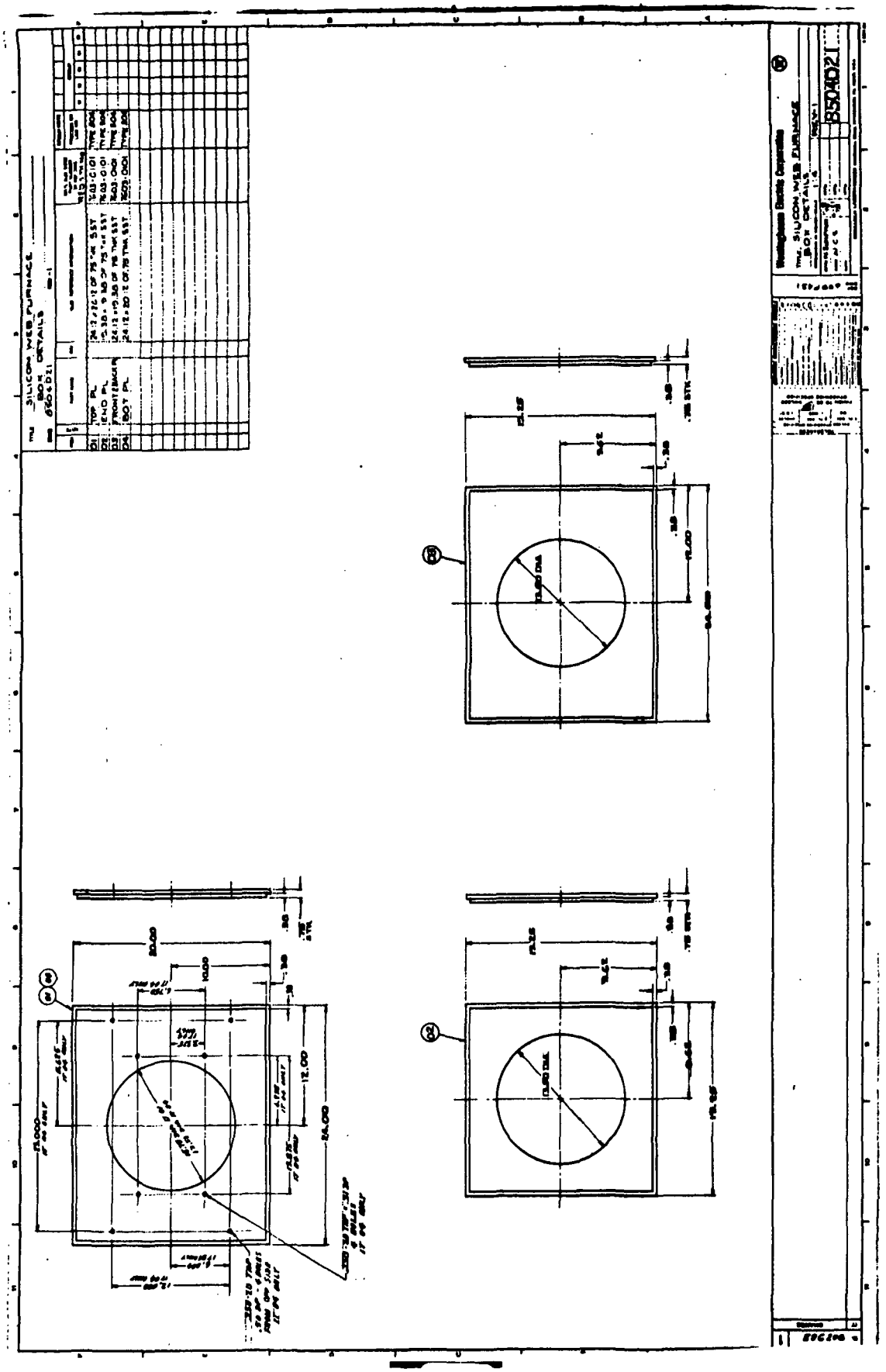
SILICON WEB FURNACE
BOX DETAILS
8504D21
Westinghouse Electric Corporation
SILICON WEB FURNACE
BOX DETAILS
8504D21

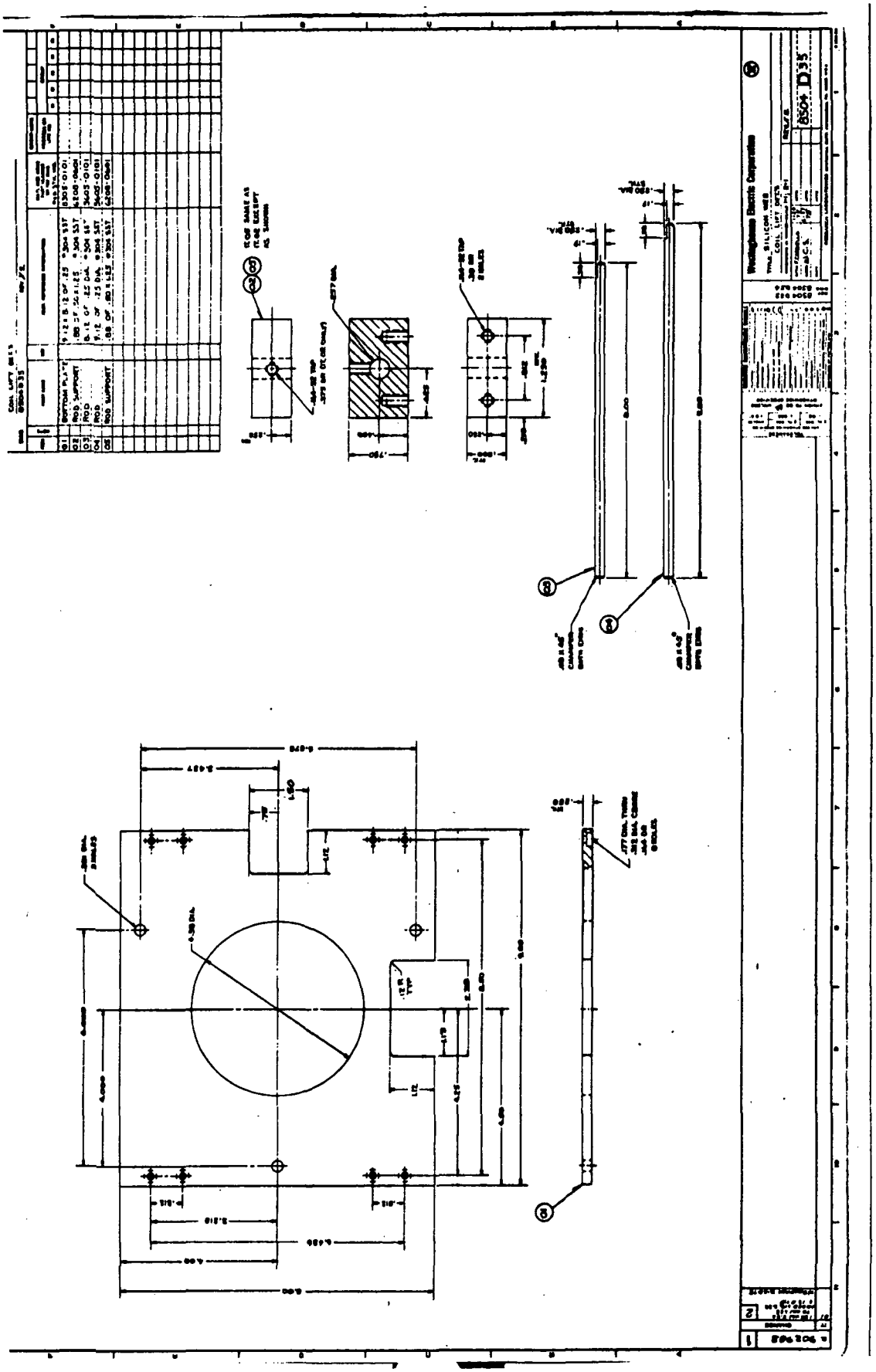

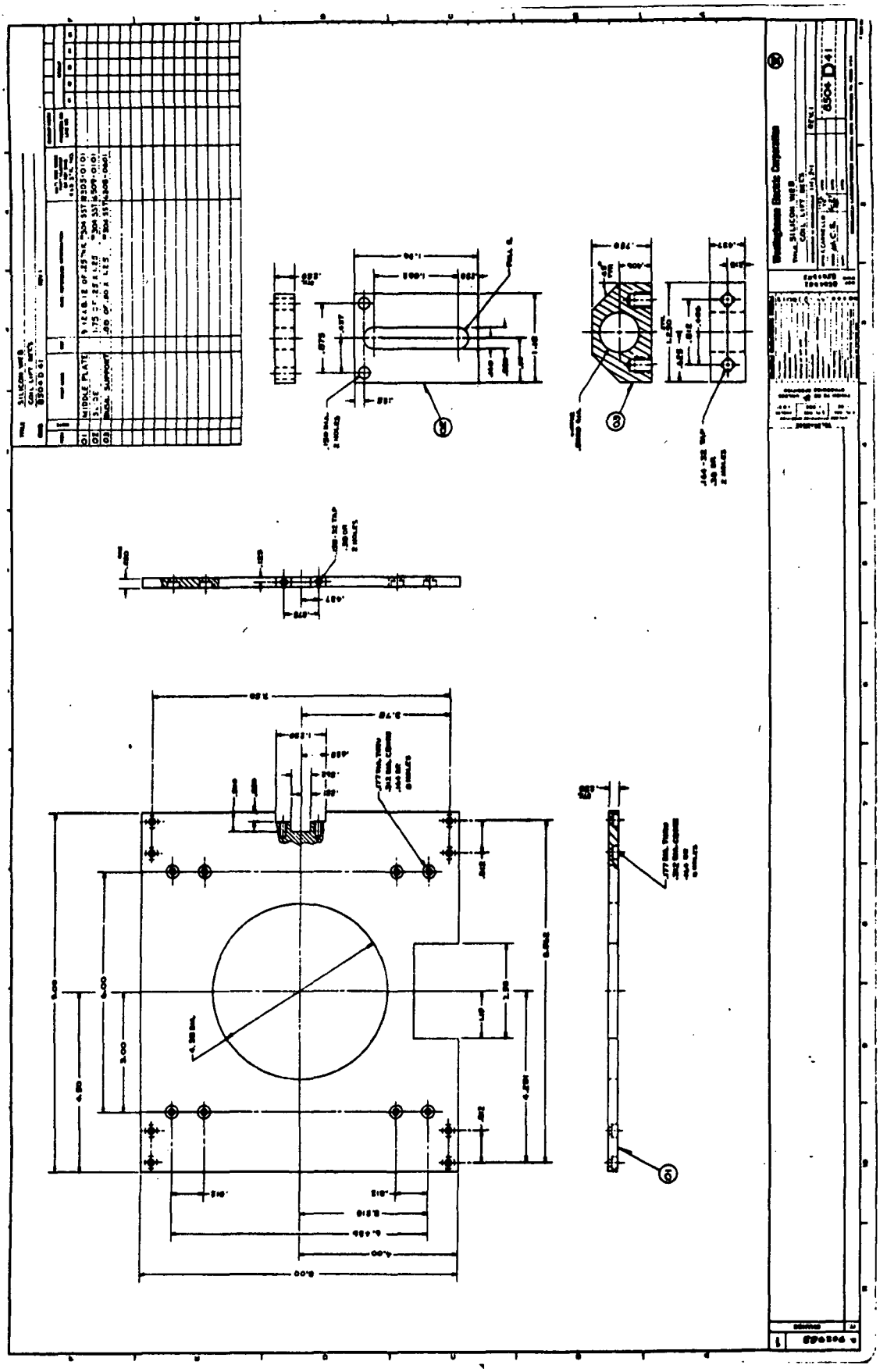

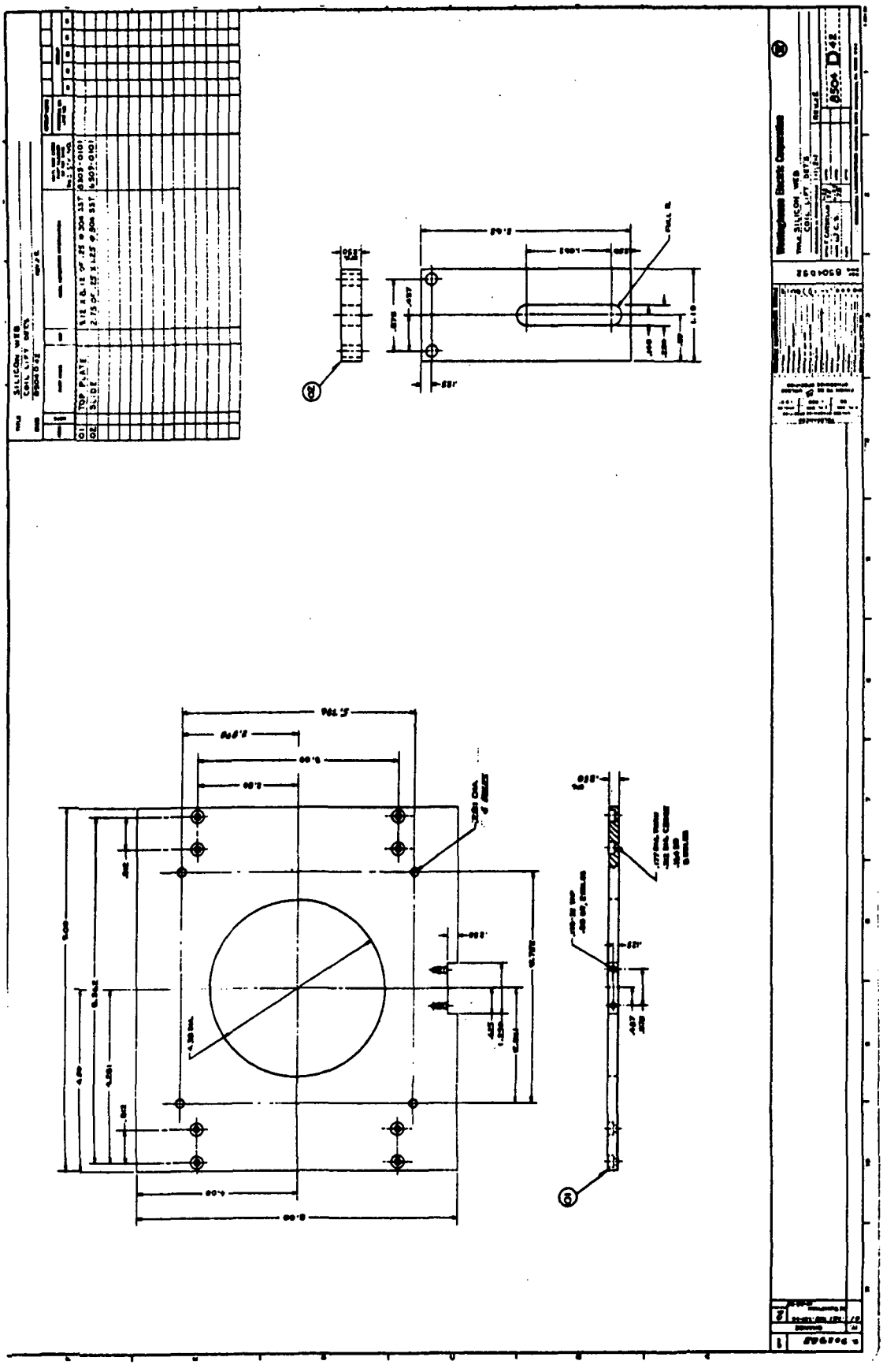

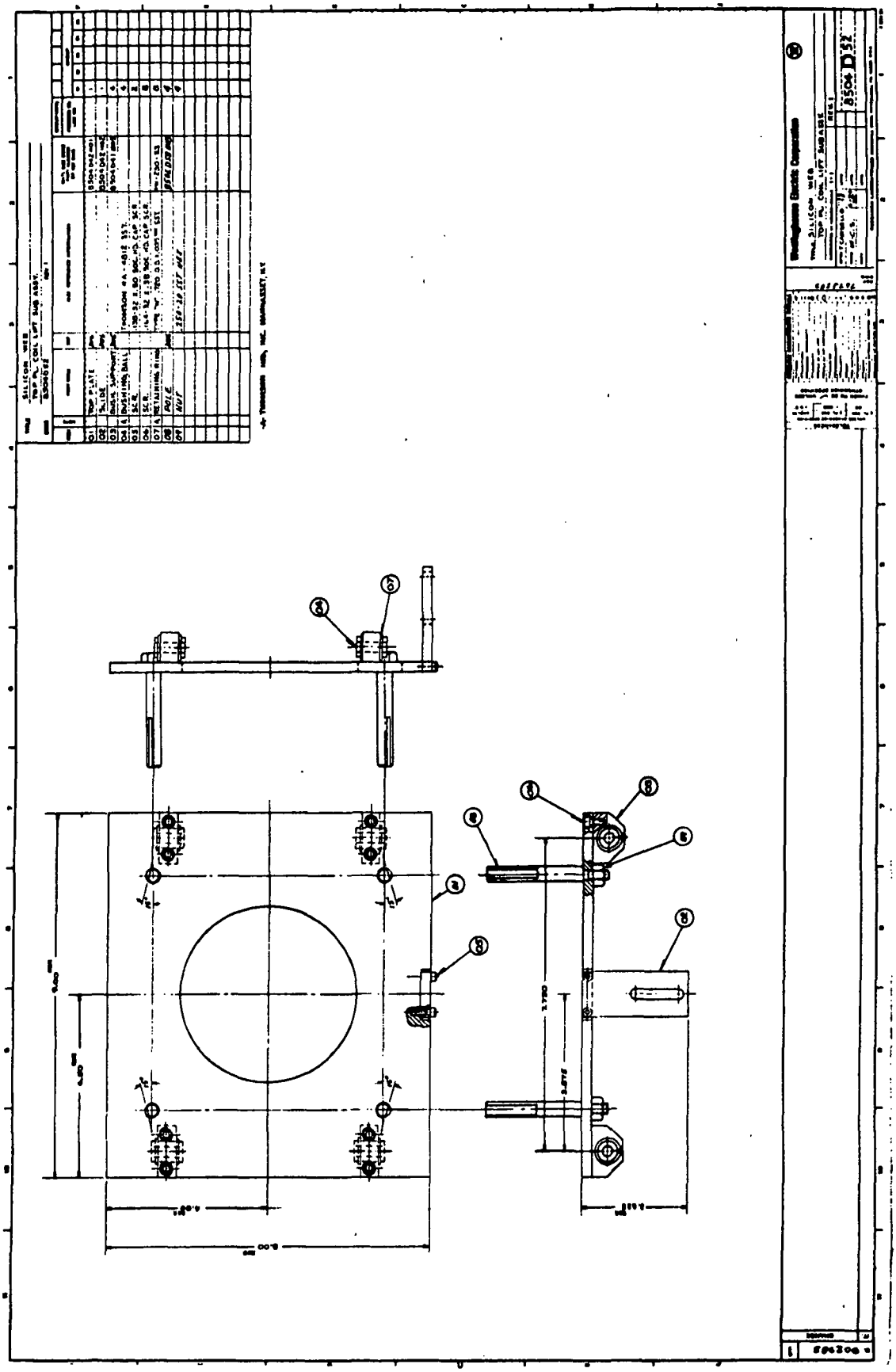

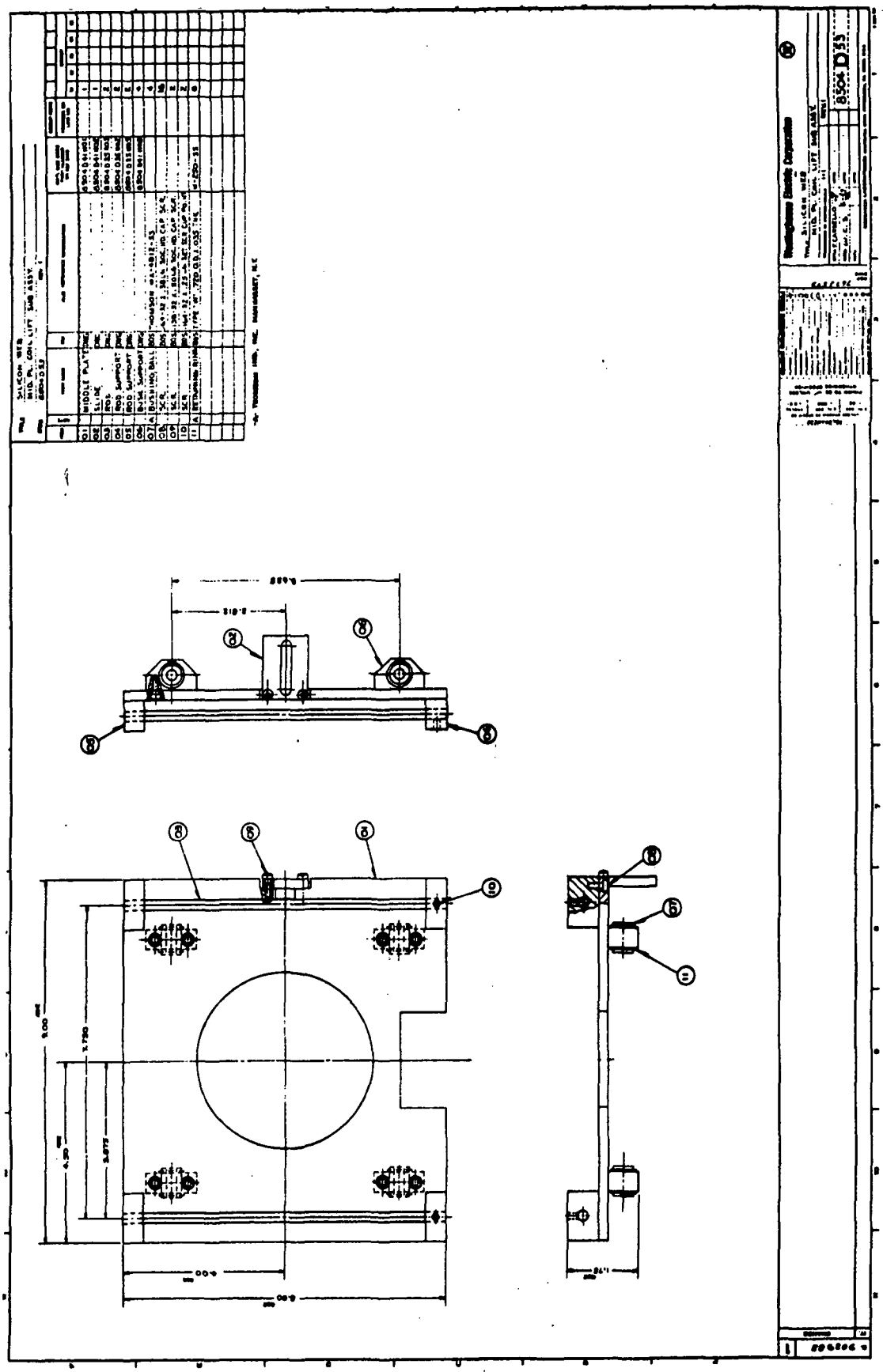

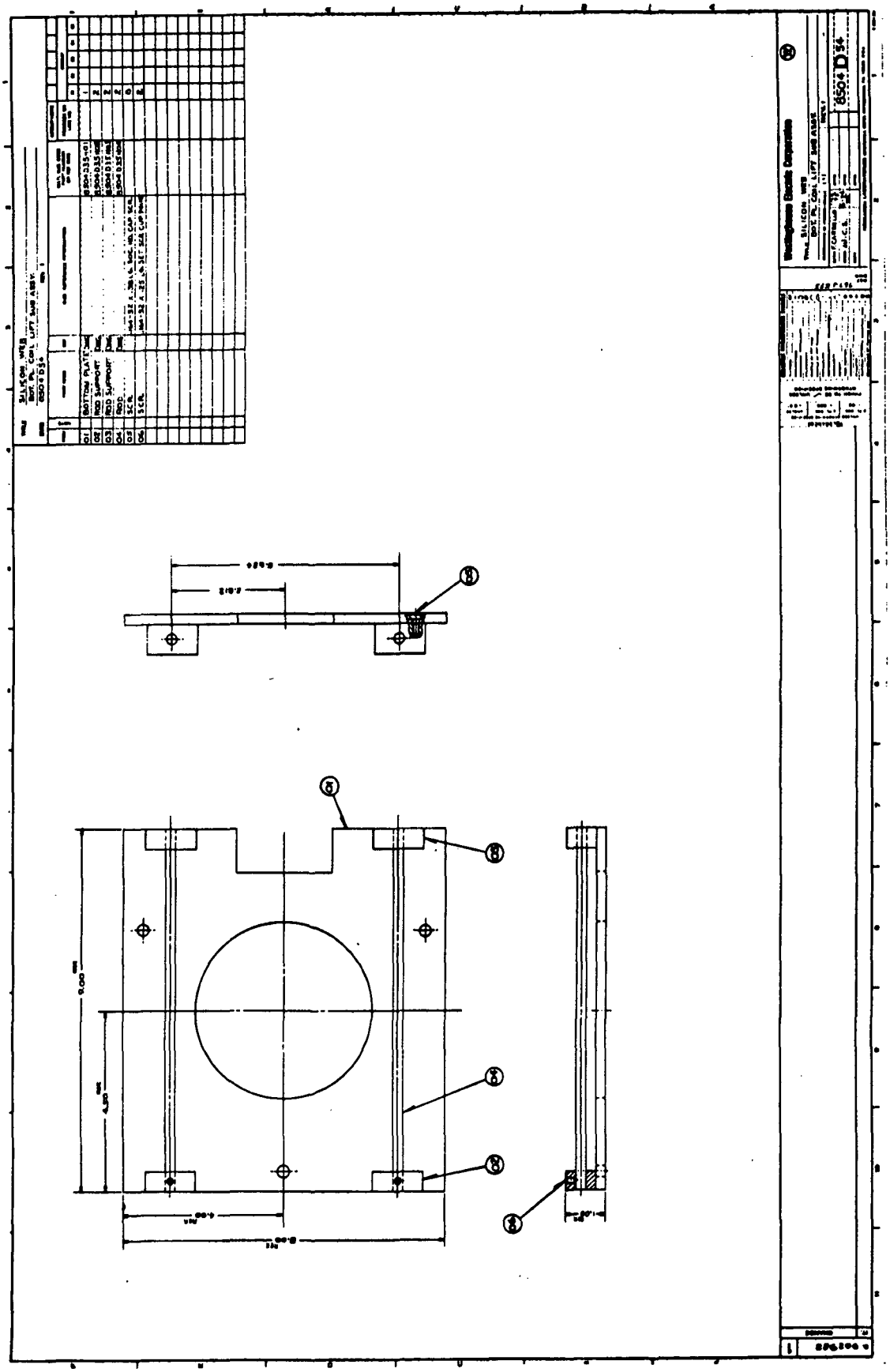

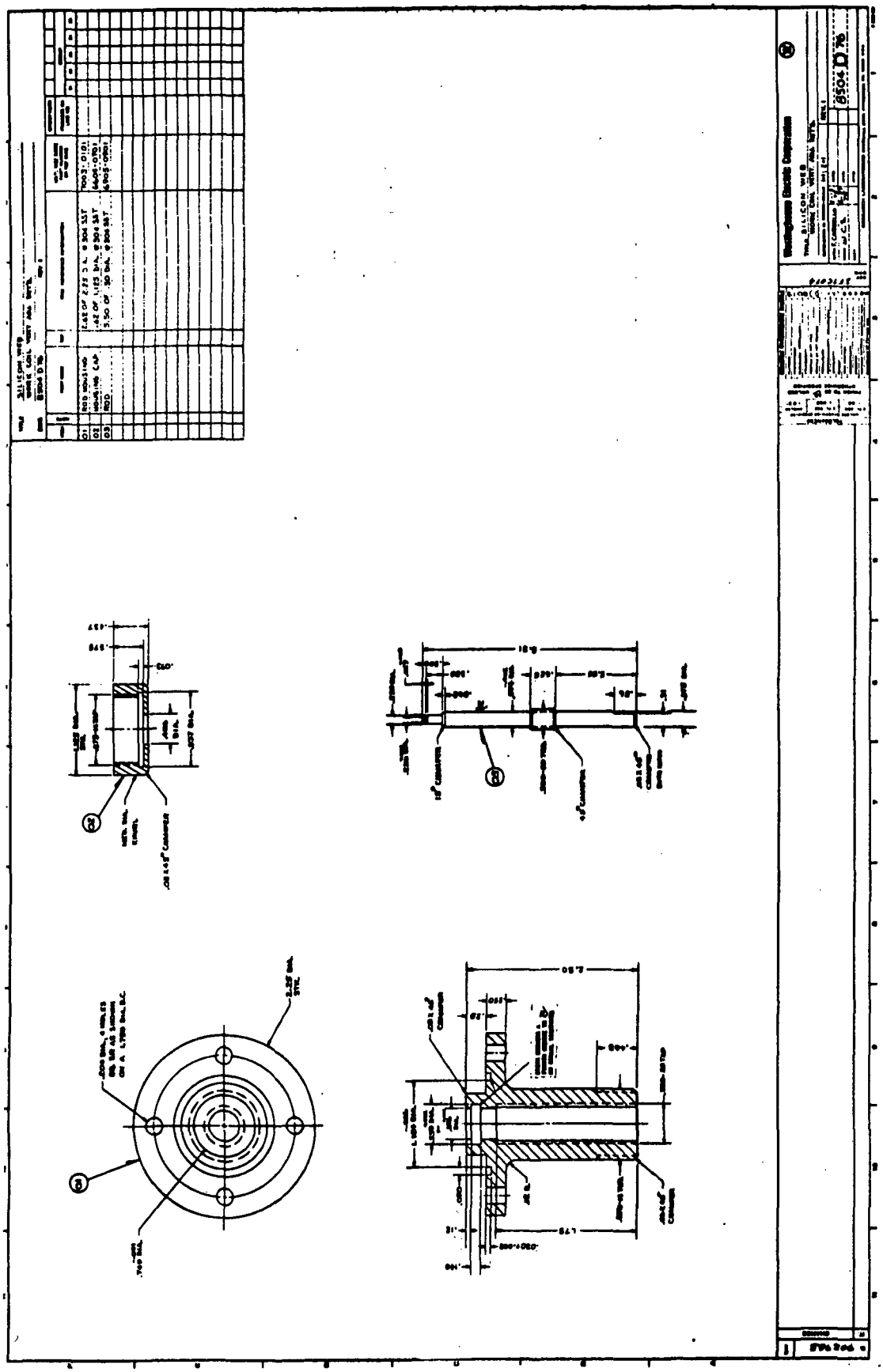

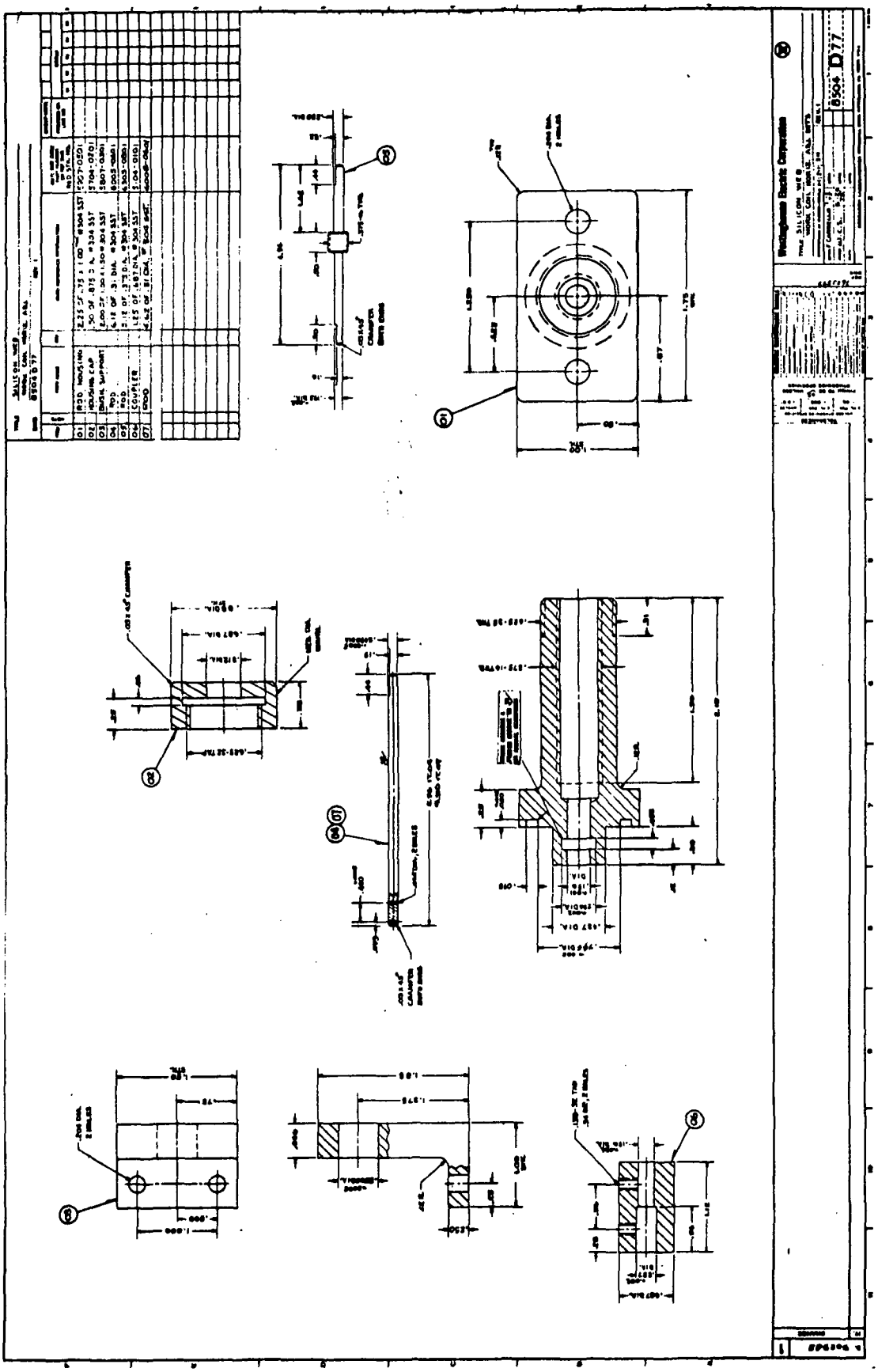

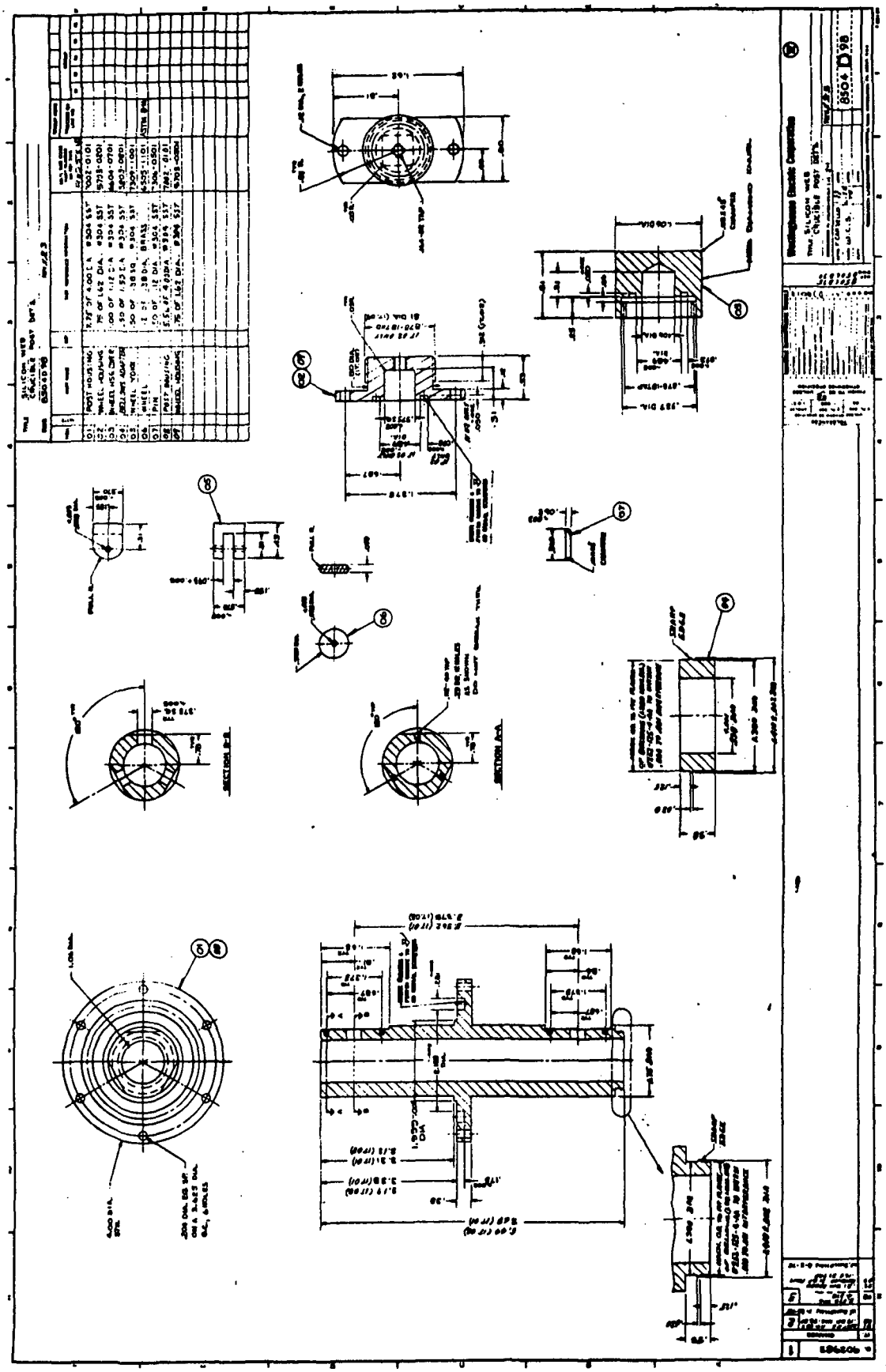

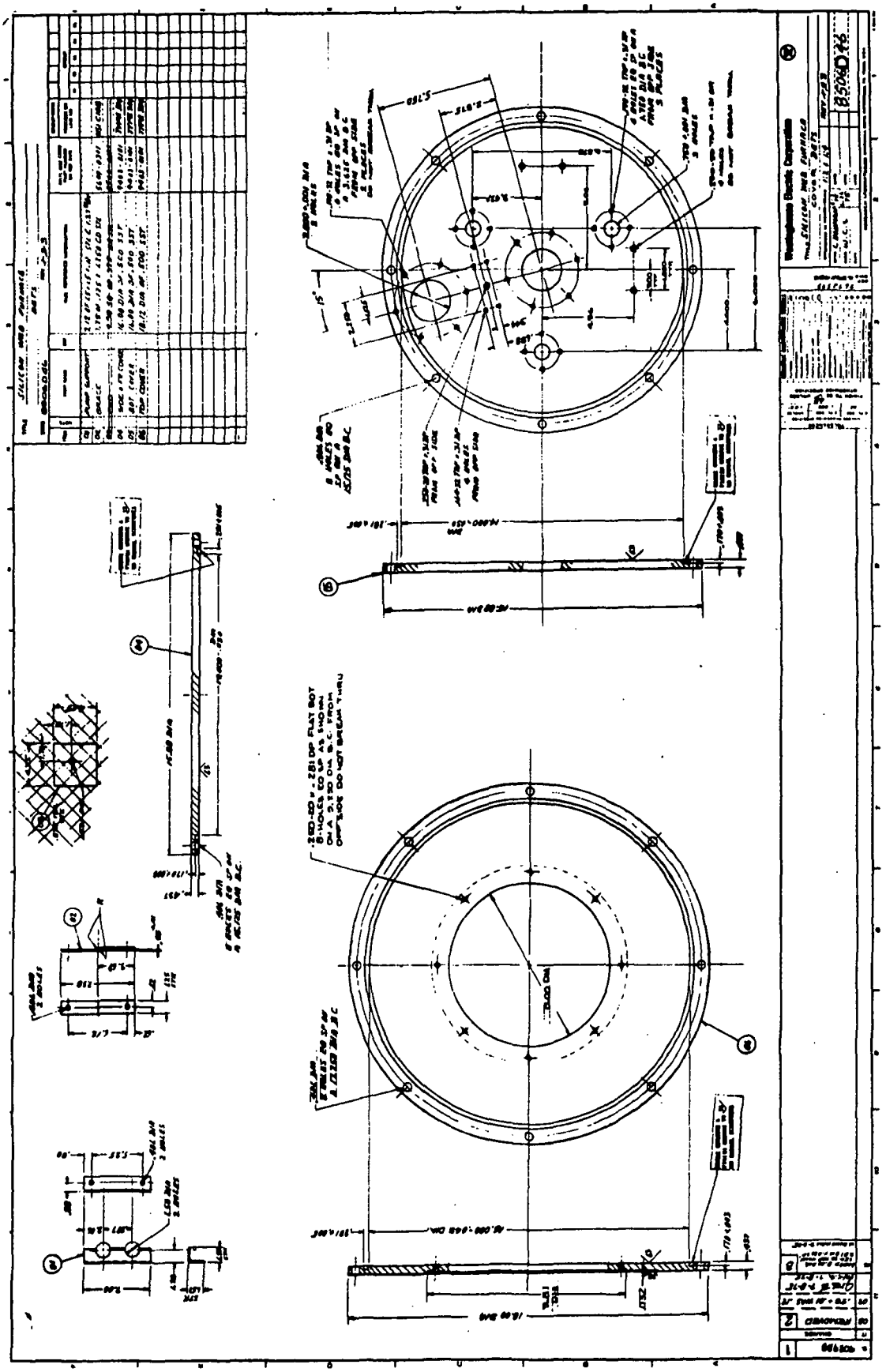

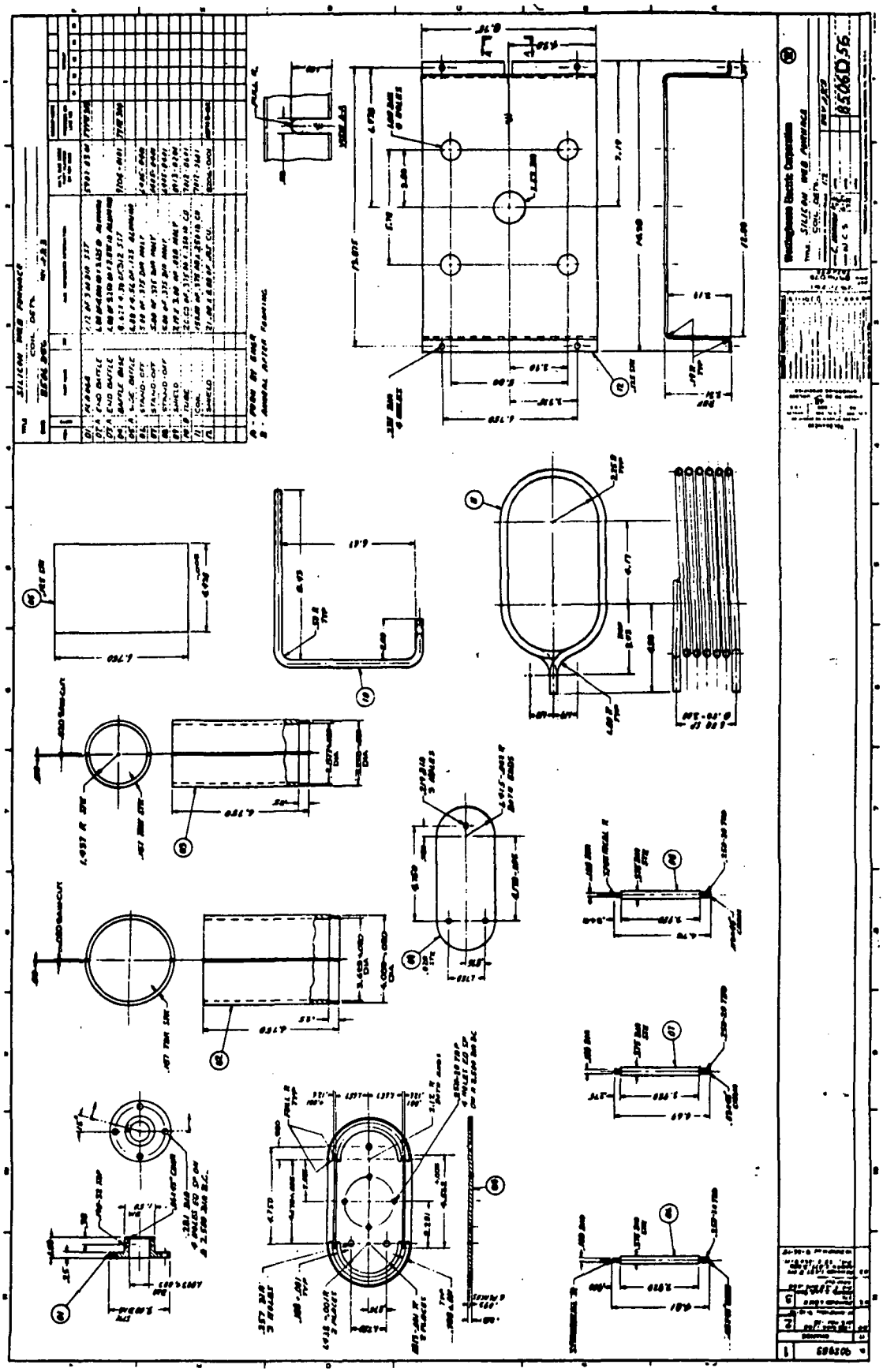

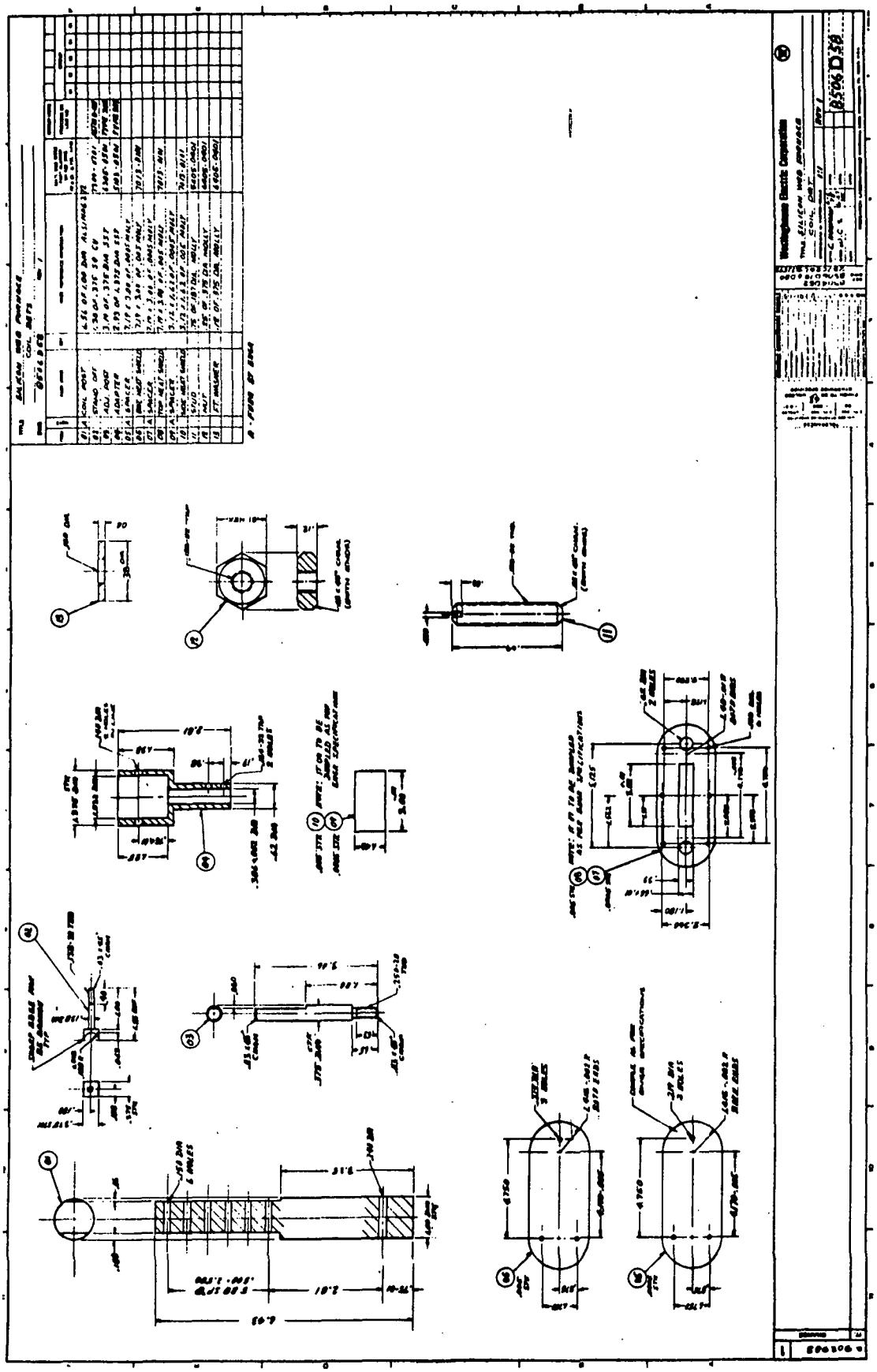

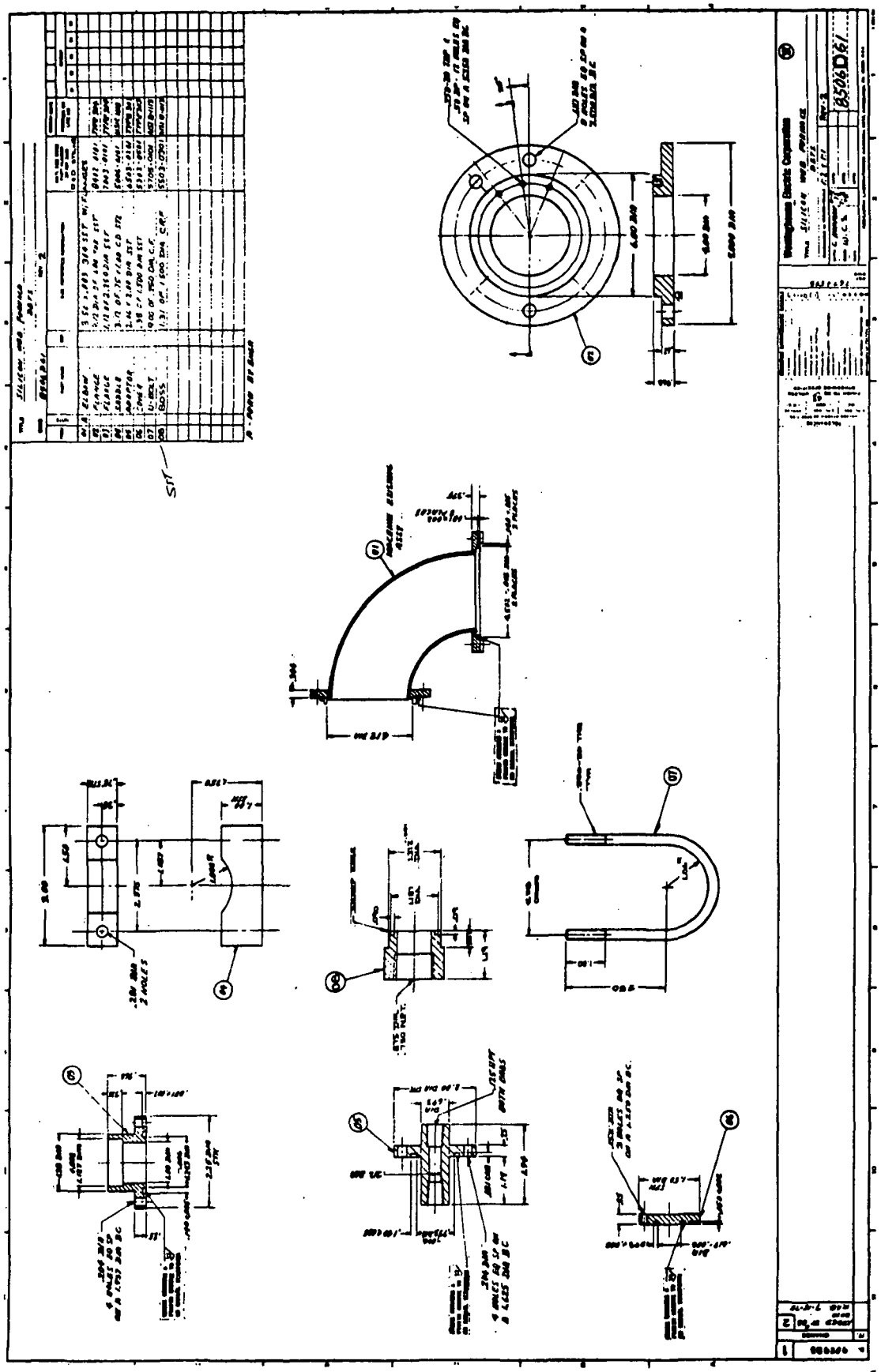

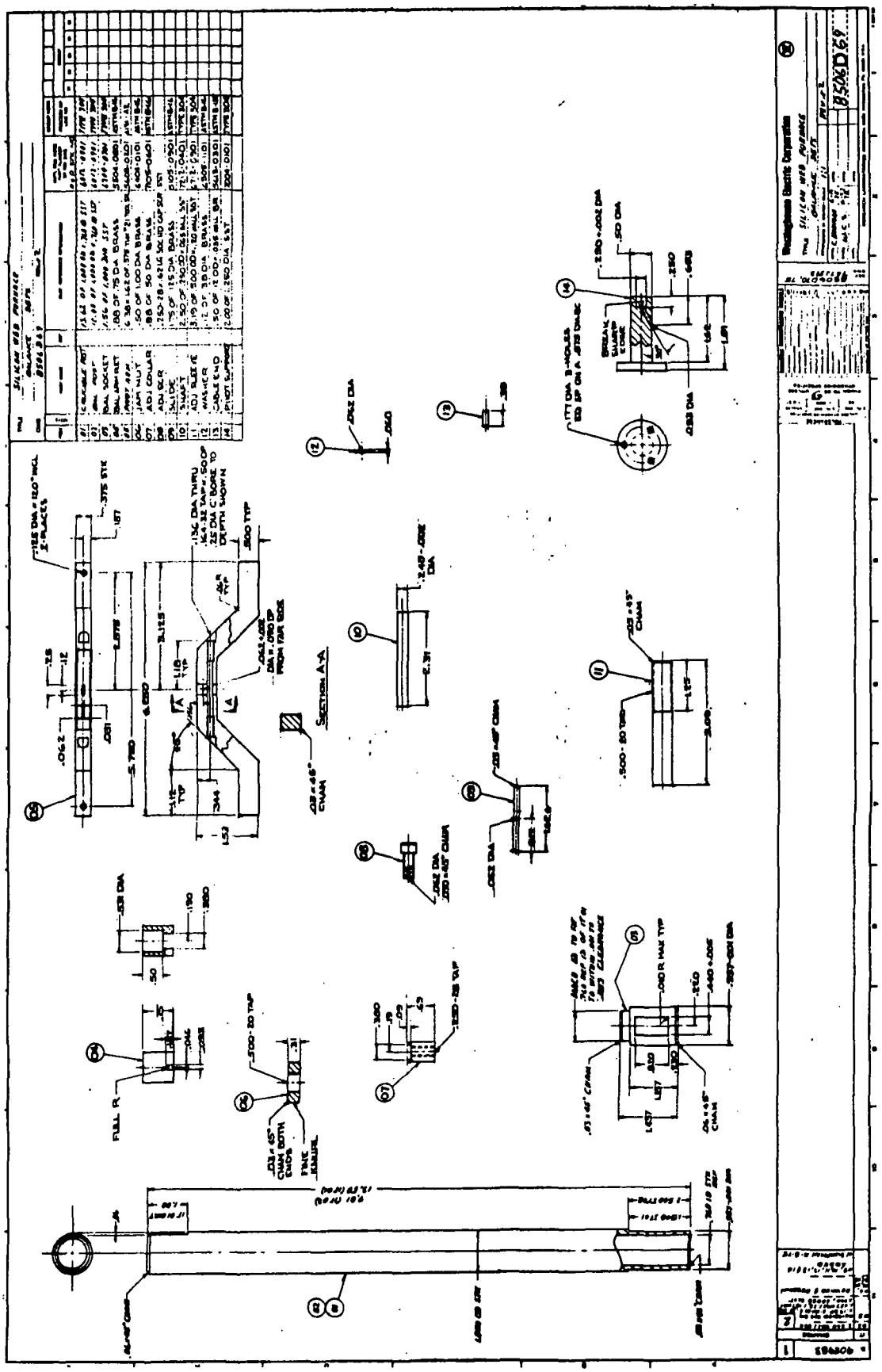

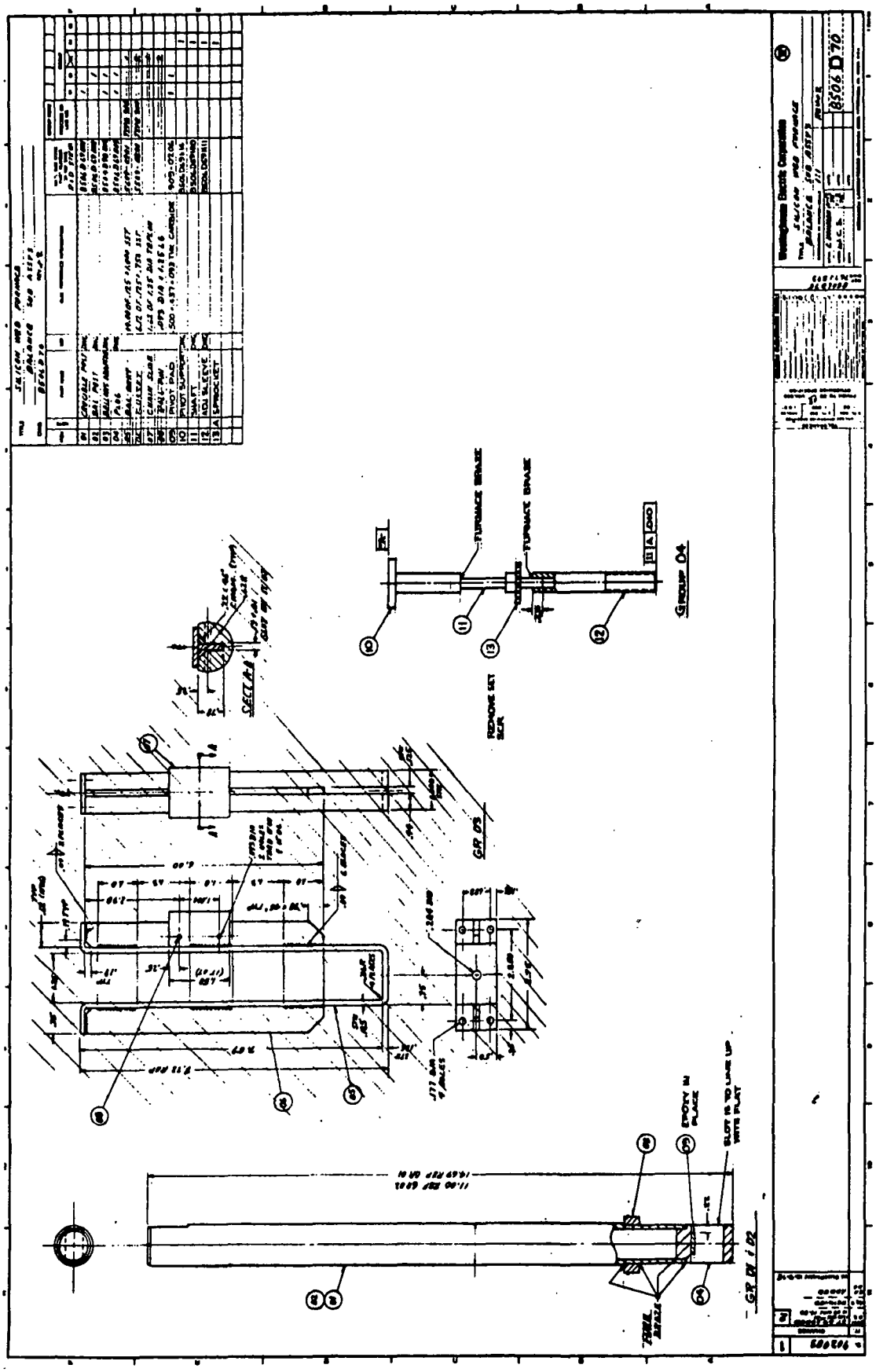

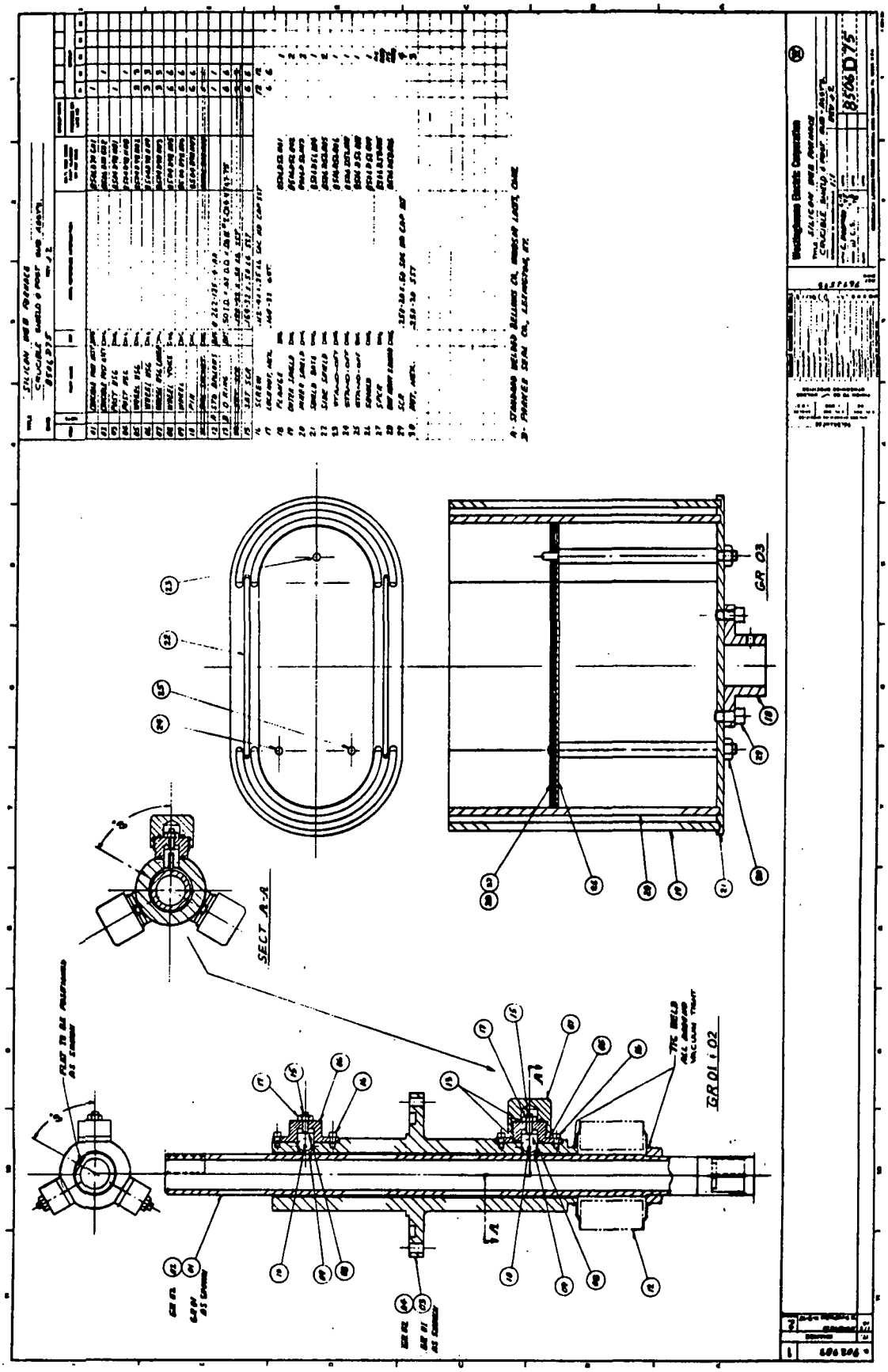

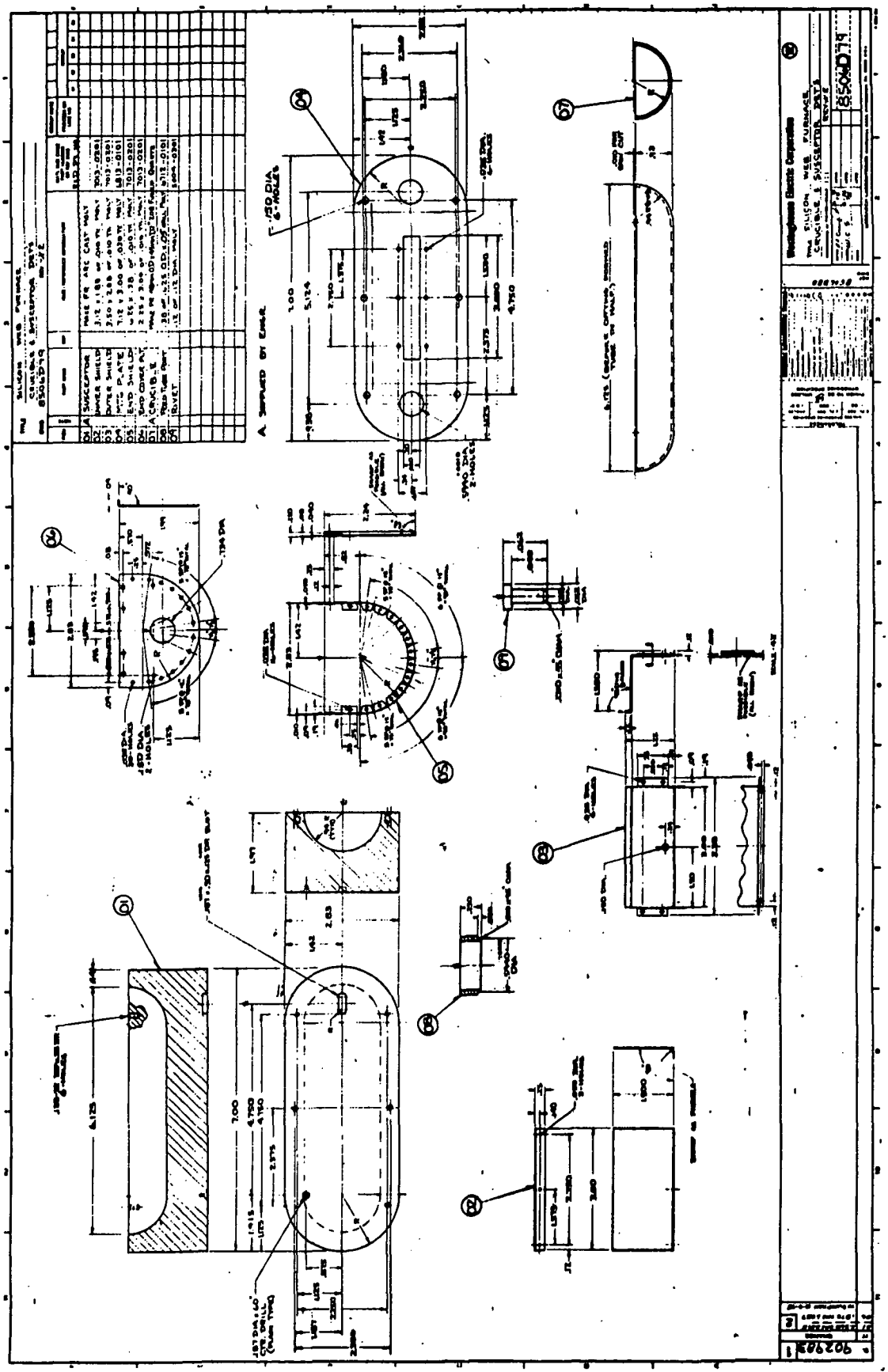

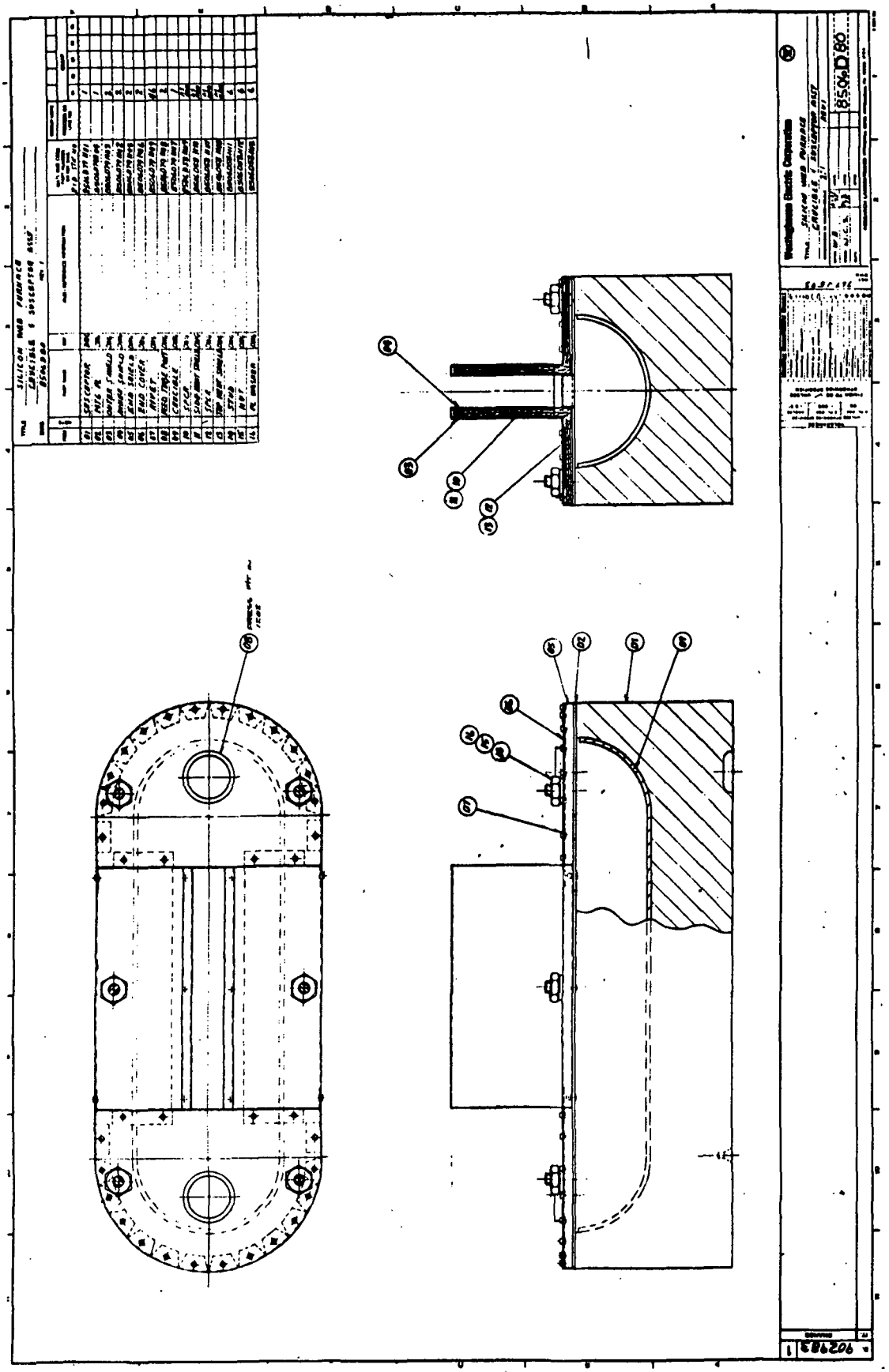

TITLE SILICON WEB
KNOB DETAILS
DWG 257C034 REV 1

ITEM	NOTE	PART NAME	DEP	(SIZE) REFERENCE INFORMATION	MATL SIZE CODE PART NUMBER OR REF DWG	GROUP NOTE PROCESS OR LINE NO	GROUP 01	02	03	04	05
01	A	KNOB		REID # GH-1N NATURAL ANODIZED	FIN.						
02	B	CHAIN SPROCKET		PIC # EM 5-27 303 SST NO. TEETH	27						
03	A	KNOB		REID # KKR 2A BLACK PENTRATE	FIN.						
04	A	KNOB		REID # G-3N NATURAL ANODIZED	FIN						

-A- REID TOOL SUPPLY CO, MUSKEGON, MICH.
-B- PIC, PITTSBURGH, PA.

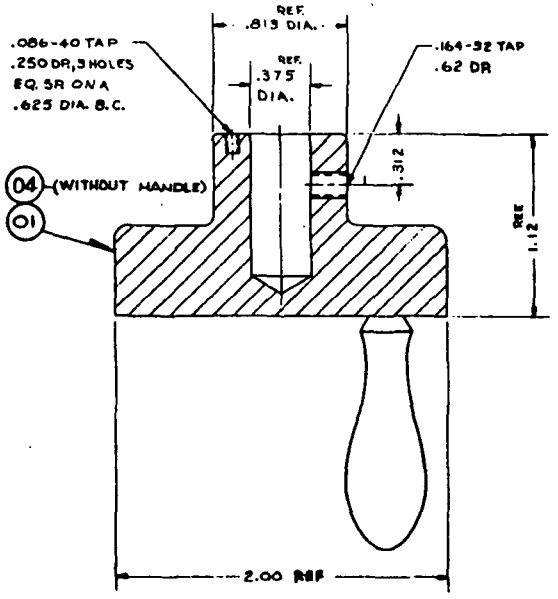

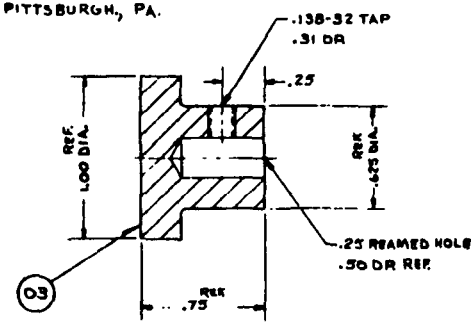

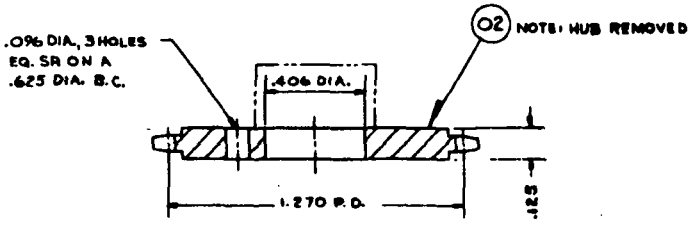

a 902983	1	CHANGE	

TOLERANCES UNLESS OTHERWISE SPECIFIED: FRACT ±1/64, DEC .X ±.1, .XX ±.03, .XXX ±.010, ANGLES ±1°, .X ±.5, .XX ±.25
FINISH TO BE 63 UNLESS OTHERWISE SPECIFIED
GEOMETRIC CHARACTERISTIC SYMBOLS
SEP 2003

Westinghouse Electric Corporation

TITLE SILICON WEB
KNOB DETAILS
DRAWING IN INCHES — SCALE 2:1, 3:1 REV. 1

DRTR R CARDELLO 11-3-78 APPD
CHKD W.C.S. APPD
SUPV APPD

257C034

RESEARCH LABORATORIES GAMEWELL DRIVE, PITTSBURGH, PA. 15235, U.S.A.

TITLE SILICON WEB
ROD HOUSING SUB ASSY.

DWG 257C074 REV 1

ITEM	NOTE	PART NAME	DEF	(SIZE) REFERENCE INFORMATION	MATL SIZE CODE PART NUMBER OR REF DWG	GROUP NOTE / PROCESS OR LINE NO	GROUP 01	02	03	04	05
01		ROD HOUSING	DWG		8504D76H01		1				
02		HOUSING CAP	DWG		8504D76H02		1				
03		ROD	DWG		8504D76H03		1				
04	A	O-RING	BOS	CAT. NO. 2-024 C557-70			1				
05	A	O-RING	BOS	CAT. NO. 2-110 C557-70			1				
06		ROD HOUSING	DWG		8504D77H01			1			
07		HOUSING CAP	DWG		8504D77H02			1			
08		ROD	DWG		8504D77H05			1			
09	A	O-RING	BOS	CAT. NO. 2-018 C557-70				1			
10	A	O-RING	BOS	CAT. NO. 2-008 C557-70				1			
11		KNOB	DWG		257C034H01				1		
12		CHAIN SPROCKET	DWG		257C034H02				1	1	
13		SCR.		.086 - 40 X .25 SOC. HD. CAP SCR.					3	3	
14		KNOB	DWG		257C034H04					1	
15		KNOB	DWG		257C034H03			1			
16		SET SCR.		.138-32 X .25 LG. STL.				1			

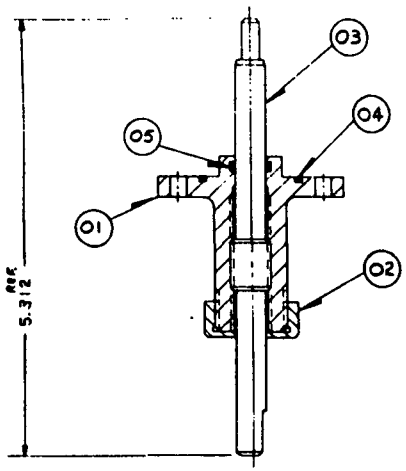

GR.01

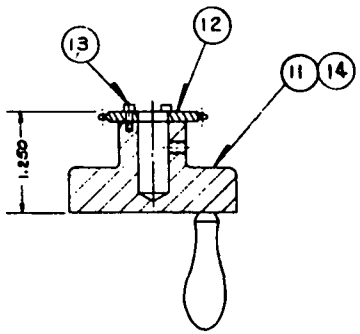

GR.03 & GR.04

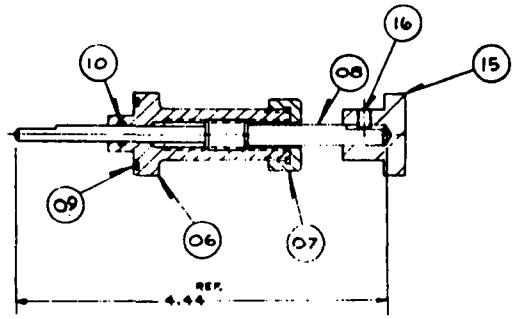

GR.02

D. 902983 1

IT. CHANGE

TOLERANCES UNLESS OTHERWISE SPECIFIED

FINISH TO BE ✓ UNLESS OTHERWISE SPECIFIED

GEOMETRIC CHARACTERISTIC SYMBOLS

REF DWG 767J593

Westinghouse Electric Corporation

TITLE SILICON WEB
ROD HOUSING SUB ASSY.

DIMENSIONS IN INCHES—SCALE 1=1 REV. 1

DFTM. F. CARDELLO APPD

CHKD W.C.S. APPD

SUPV APPD

257 C 074

RESEARCH LABORATORIES CHURCHILL BORO, PITTSBURGH, PA 15235, U.S.A.

TITLE SILICON WEB FURNACE
BACK COVER WELDMENT
DWG 257C251 REV-2

ITEM	NOTE	PART NAME	DEF	(SIZE) REFERENCE INFORMATION	MATL SIZE CODE PART NUMBER OR REF DWG	GROUP NOTE PROCESS OR LINE NO	GROUP 01	02	03	04	05
01		COVER		16.00 DIA OF .500 SST	9403-0101	TYPE 304	1				
02		BOSS	DWG		8506D61H08		2				

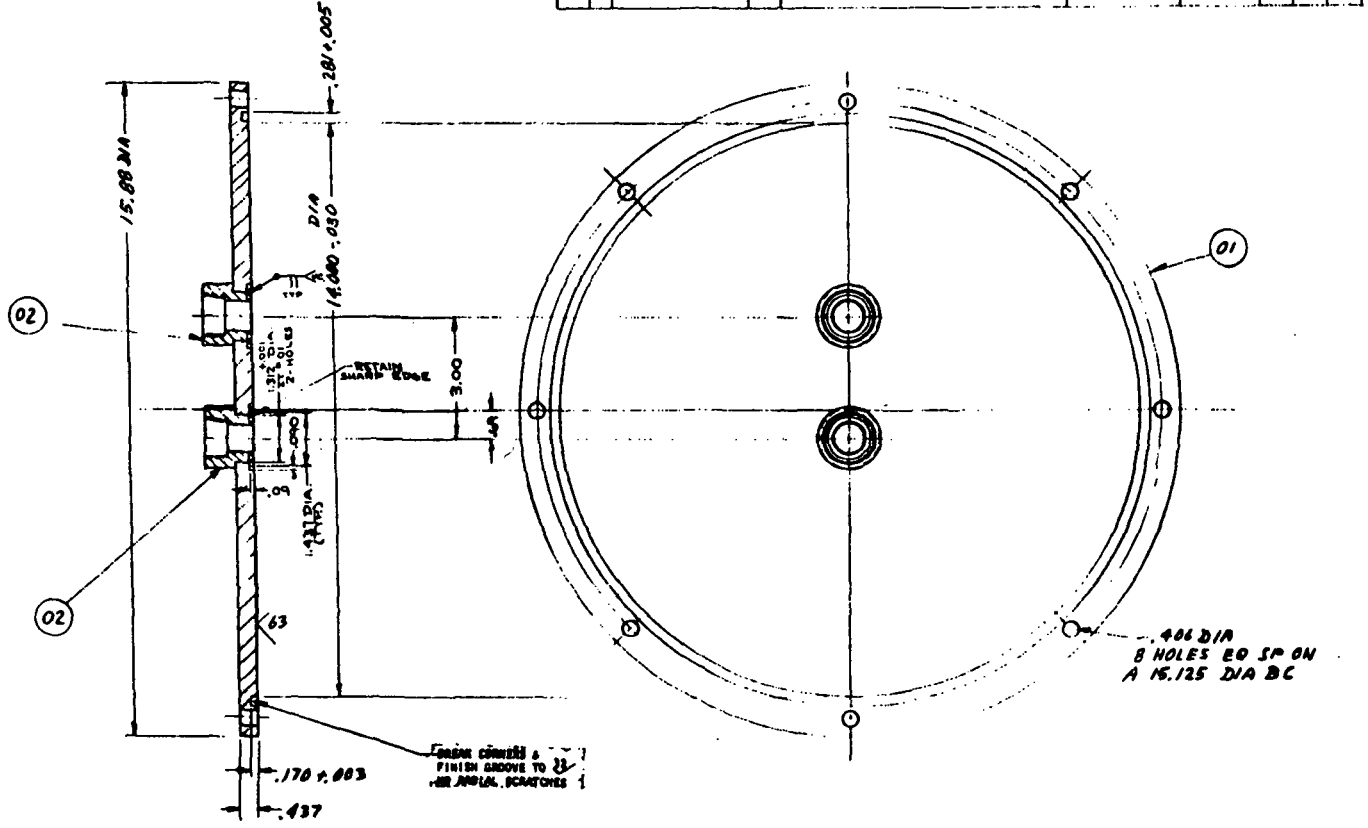

IT.	CHANGE	
1	Removed Rep.	
2		

D 902983

W.A.B 7-15-75

TOLERANCES

FINISH TO BE 63 UNLESS OTHERWISE SPECIFIED

GEOMETRIC CHARACTERISTIC SYMBOLS

Westinghouse Electric Corporation

TITLE SILICON WEB FURNACE
BACK COVER WELDMENT

DIMENSIONS IN INCHES—SCALE 1:2 REV-2

DFTG C. HOHMAN
CHKD W.C.S.
SUPV

257C251

RESEARCH LABORATORIES CHURCHILL BORO PITTSBURGH, PA 15235 U.S.A.

TITLE SILICON WEB FURNACE
COIL & ROUGHING PUMP SUB-ASS'Y.
DWG 257C261 REV 1

ITEM	NOTE	PART NAME	DEF	(SIZE) REFERENCE INFORMATION	MATL SIZE CODE PART NUMBER OR REF DWG	GROUP NOTE / PROCESS OR LINE NO	GROUP 01	02	03	04	05
01		COIL	DWG		8506D56HH		1				
02		STAND-OFF	DWG		8506D50H02		24				
03		FLANGE	DWG		8506D61H03			1			
04	A	90° FITTING ELL	BOS	1⅛ TO 1⅛ STYLE #WE-503 PART #2344	(FITTING TO SOLDER)			1			
05	B	SOLENOID VALVE	BOS	1 1/8" PART # 1254-1⅛				1			
06		TUBING		3.00 OF 1.125 OD x 1.000 ID CU	6012-0102			1			

A - MUELLER BRASS CO., PGH., PA. (SALES OFFICE)
B - NAT'L RES. CORP.

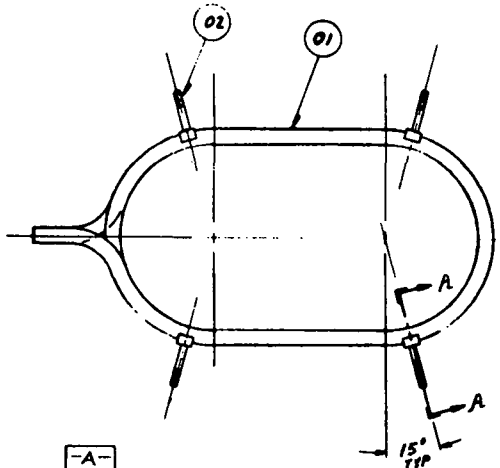

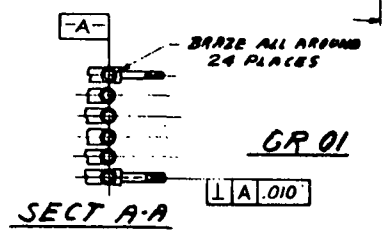

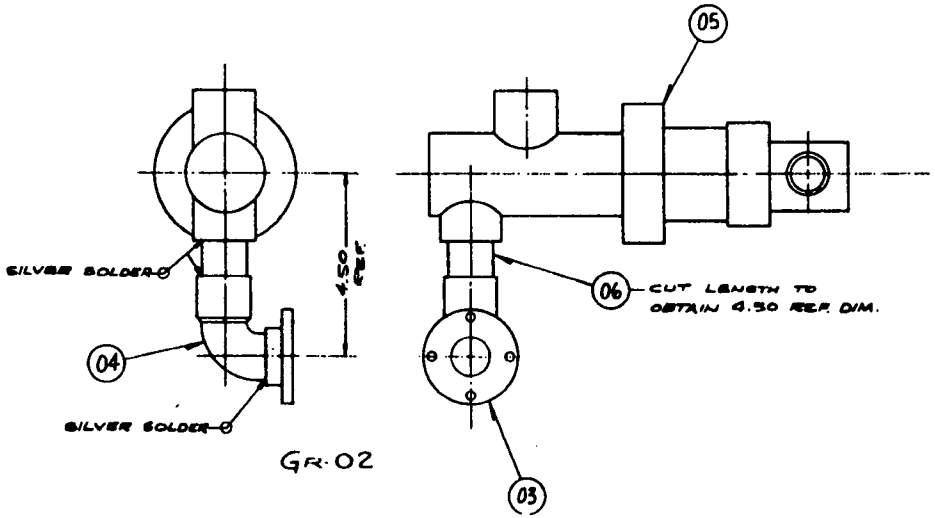

D. 902983 1
IT. CHANGE

TOLERANCES
UNLESS OTHERWISE SPECIFIED
FINISH TO BE ✓ UNLESS OTHERWISE SPECIFIED

GEOMETRIC CHARACTERISTIC SYMBOLS

Westinghouse Electric Corporation

TITLE SILICON WEB FURNACE
COIL & ROUGHING PUMP SUB-ASS'Y.
DIMENSIONS IN INCHES—SCALE 1:2 REV 1
DFTM C. HOHMAN
CHKD W.C.S.
APPD
257C261
RESEARCH LABORATORIES CHURCHILL BORO, PITTSBURGH, Pa. 15220, U.S.A.

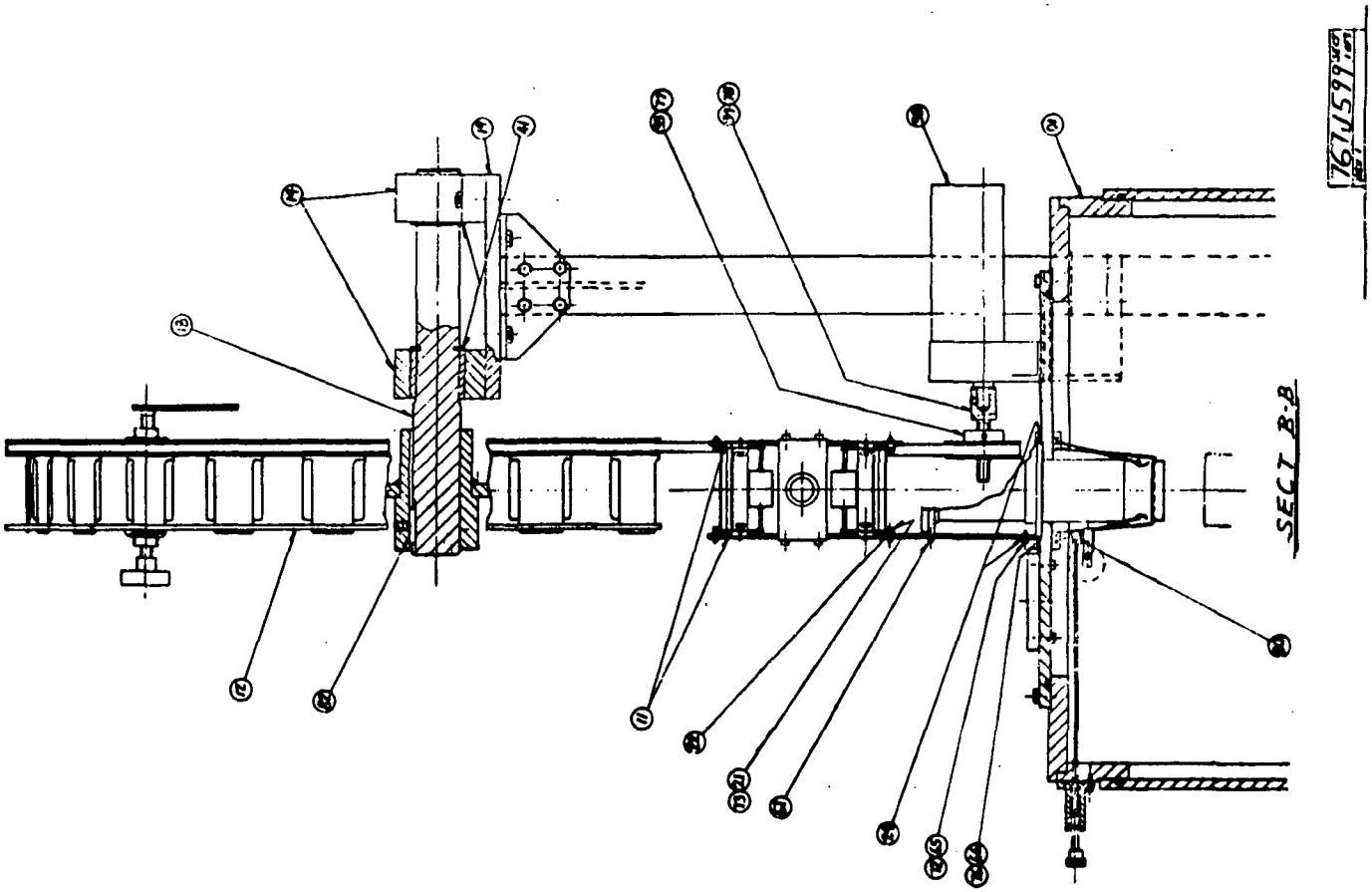
SEZ. B-B

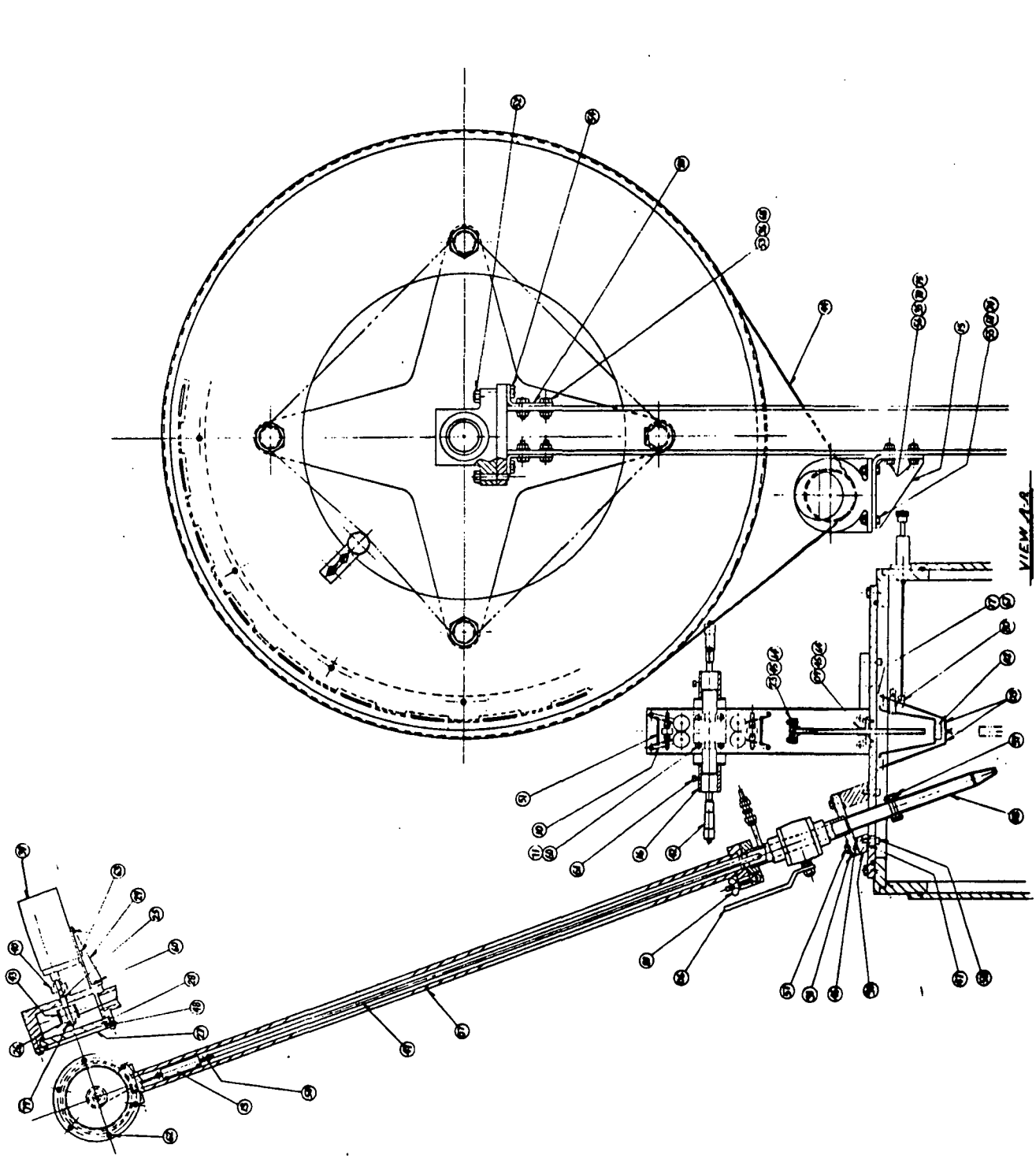
VIEW A-A

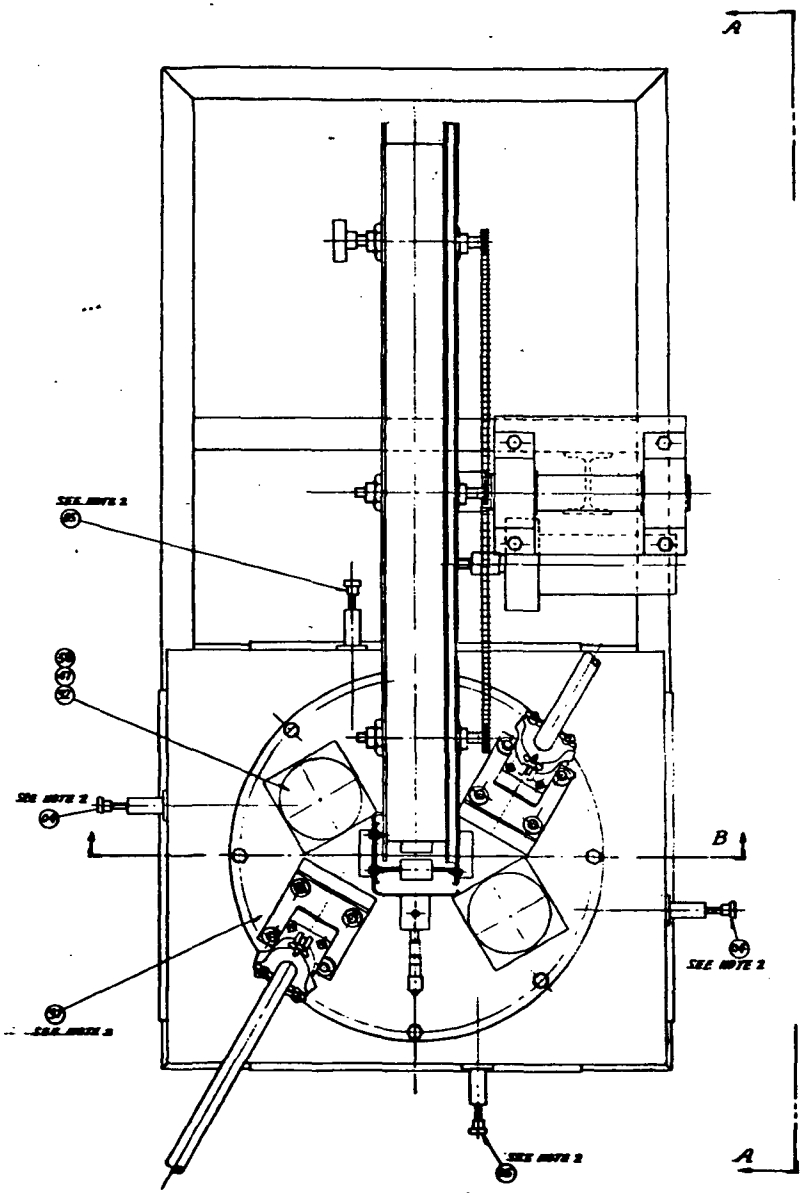

GEN. ASSY.
767J599

ITEM	QTY	PART NO.	DESCRIPTION
01	2		
02	2		
03	2		
04	2		
05	2		
06	2		
07	2		
08	2		
09	1		
10	4		
11	1		
12	1		
13	2		
14	2		
15	2		
16	2		
17	2		
18	2		
19	2		
20	2		
21	2		
22	2		
23	2		
24	2		
25	2		
26	2		
27	2		
28	2		
29	2		
30	2		
31	2		
32	2		
33	1		
34	1		
35	4		
36	8		
37	1		
38	1	8A650.025	
39	1		
40	1		
41	2		
42	2		
43	1		
44	1		
45	2		
46	2		
47	4		
48	2		
49	1		
50	1		
51	2		
52	2		
53	6		
54	6		
55	6		
56	12		
57	6		
58	6		
59	2		
60	2		
61	2		
62	12		
63	6		
64	8		
65	12		
66	4		
67	12		
68	6		
69	2		
70	4		
71	8		
72	6		
73	2		
74	4		
75	1		
76	1		
77	1		
78	1		
79	1		
80	6		
81	1		

A - ELECTRO CRAFT CORP.
B - CLEAR TRONICS CORP., NEW BRAINTREE, MASS.
C - PIC DESIGN CORP., BRIDGEPORT, CT.
D - WORLDS FOREMOST, INC., LONG ISLAND, N.Y.
E - LEAR PRECISION CORP., REVERE, MASS.
F - BERGEN WIRE ROPE CO., LODI, N.J.
G - MITCHELL & BROWN MFG. CO., TAUNTON, MASS.
H - PHANTOM GEAR CO., LEBANON, N.H.

NOTES:
1. FURNISHED BY USER.
2. (THIS DWG.) REPLACES IK 26, DWG 767J599 (WITH BOLTS & O-RINGS AND SAME)
3. (THIS DWG.) REPLACES IK 26, DWG 767J599 (WITH BOLTS & O-RINGS AND SAME)

Westinghouse Electric Corporation
SILICON WEB FURNACE
GEN. ASSY.
SIZE D
767J599
SHEET 1 OF 1

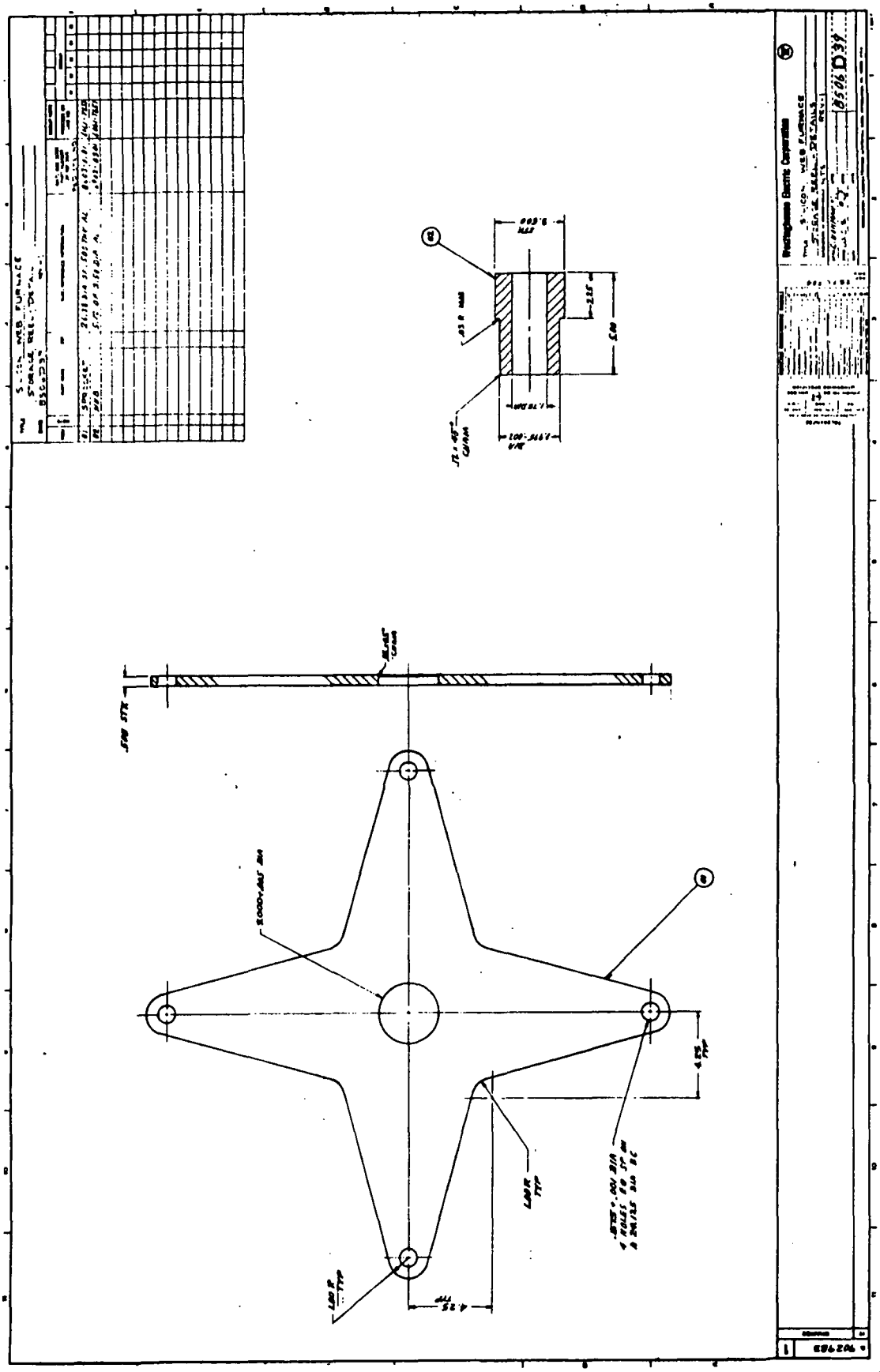

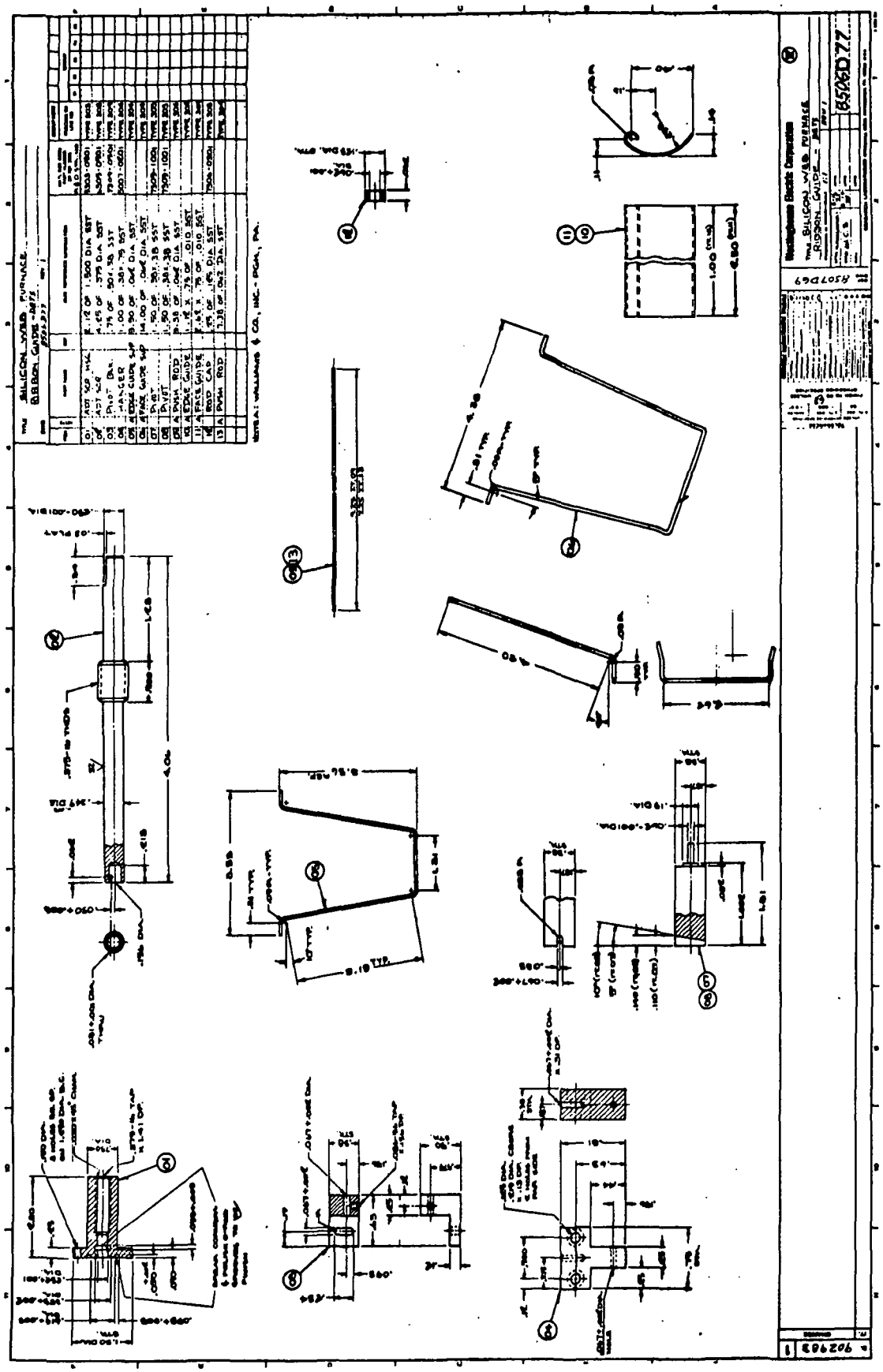
SILICON WEB FURNACE
RIBBON GUIDE
Westinghouse Electric Corporation
8506D77

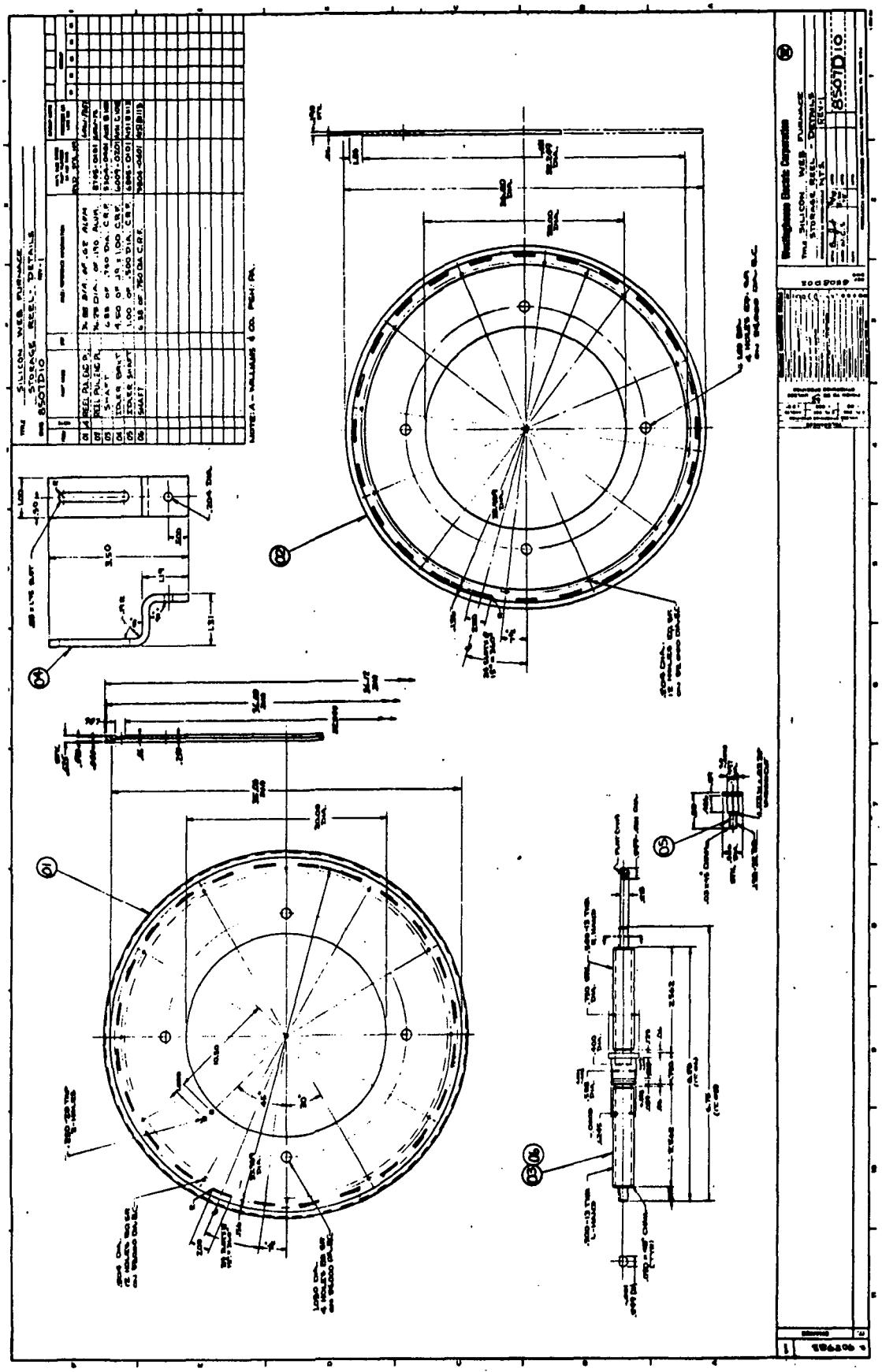

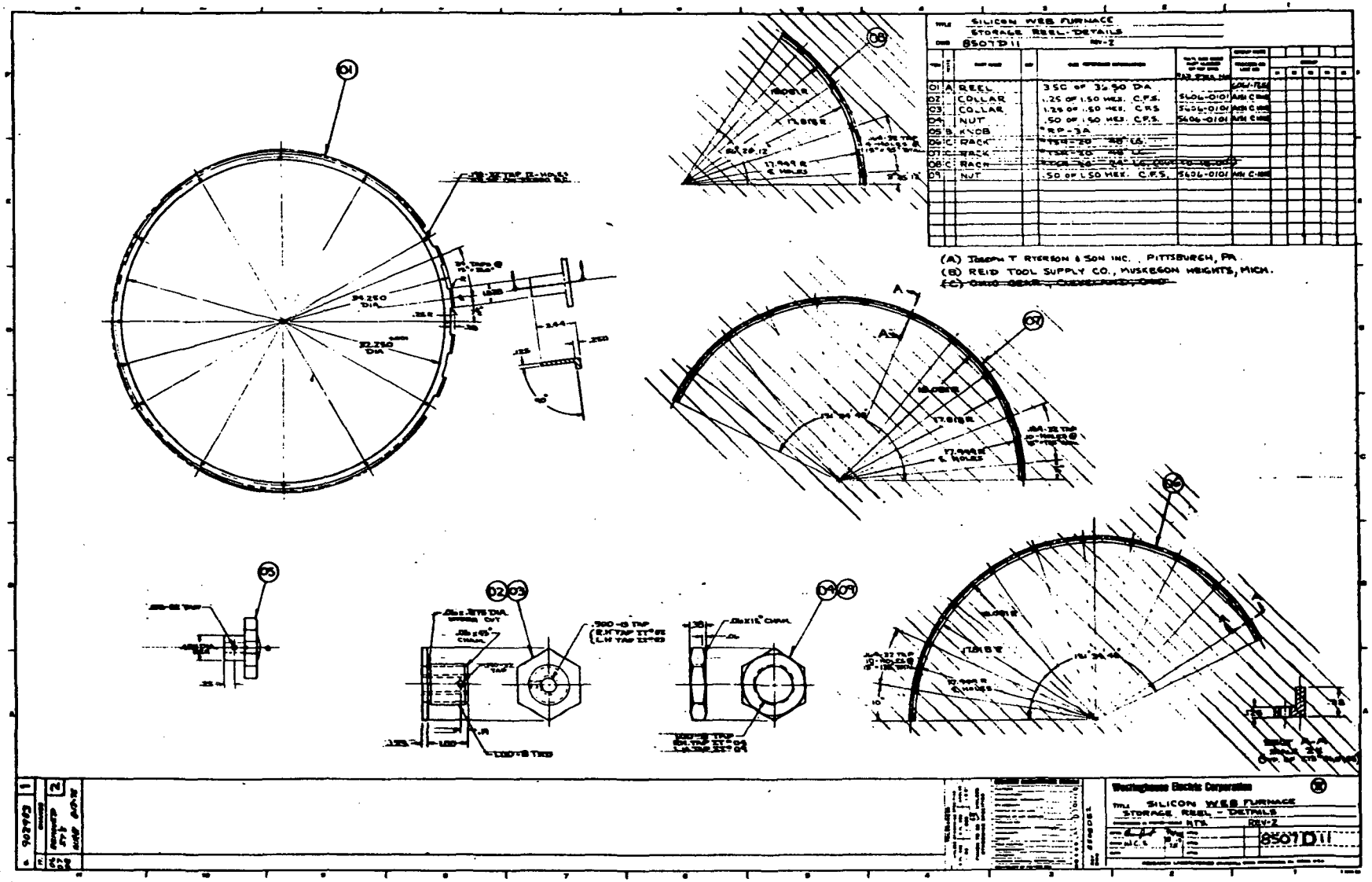
SILICON WEB FURNACE
STORAGE REEL - DETAILS
8507D11
REV-2
01 A REEL .35C OF 36.50 DIA.
02 COLLAR 1.25 OF 1.50 HEX. C.P.S. 5406-0101
03 COLLAR 1.25 OF 1.50 HEX. C.R.S 5406-0101
04 NUT .50 OF 1.50 HEX. C.P.S. 5406-0101
05 B KNOB
06 C RACK
07 C RACK
08 C RACK
09 NUT .50 OF 1.50 HEX. C.P.S. 5406-0101
(A) JOSEPH T RYERSON & SON INC. PITTSBURGH, PA.
(B) REID TOOL SUPPLY CO., MUSKEGON HEIGHTS, MICH.
(C) OHIO GEAR, CLEVELAND, OHIO
Westinghouse Electric Corporation
SILICON WEB FURNACE
STORAGE REEL - DETAILS
8507D11

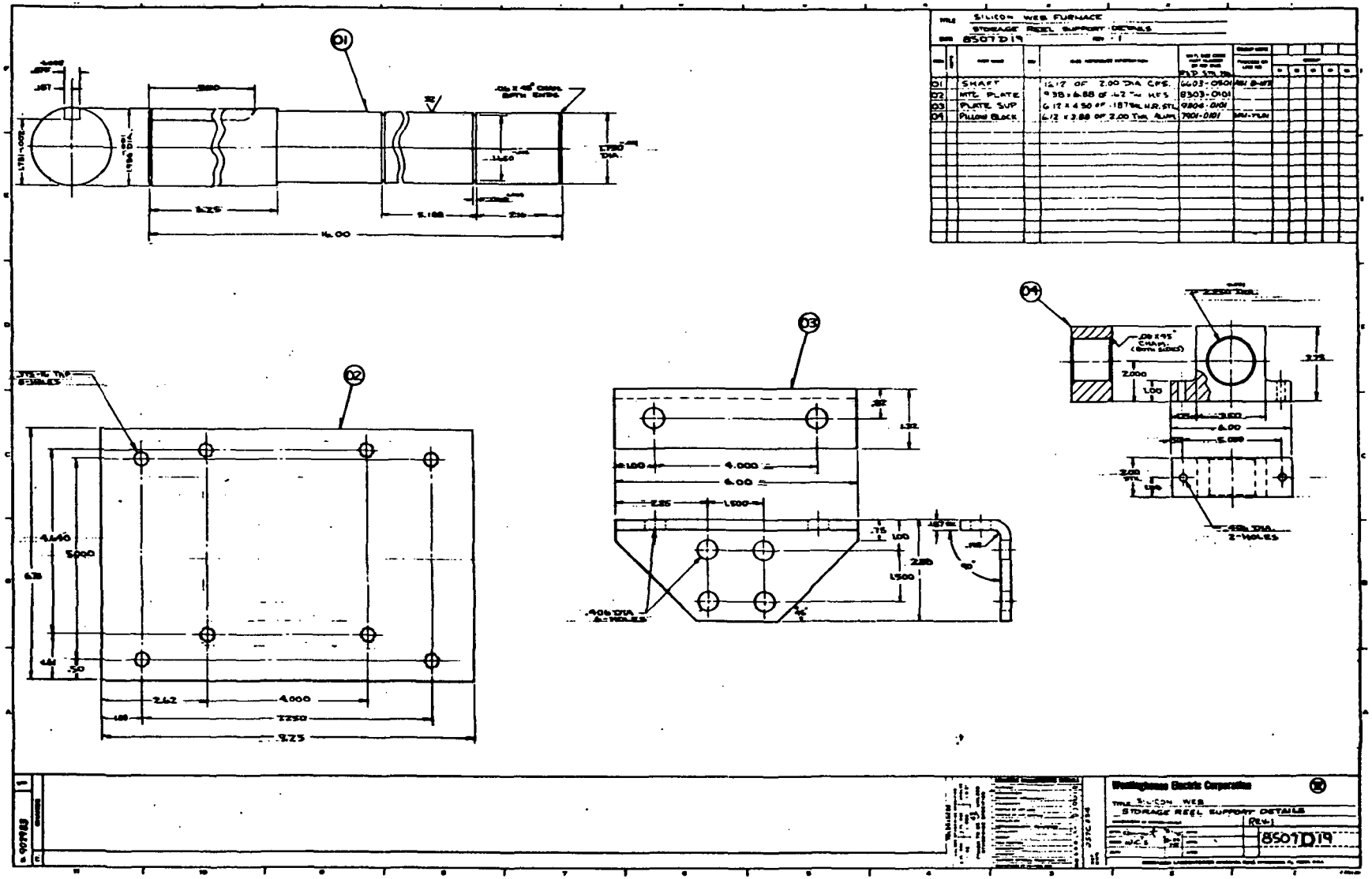
SILICON WEB FURNACE
STORAGE REEL SUPPORT DETAILS
8507D19
01 SHAFT
02 MTG PLATE
03 PLATE SUP
04 PILLOW BLOCK
Westinghouse Electric Corporation
8507D19

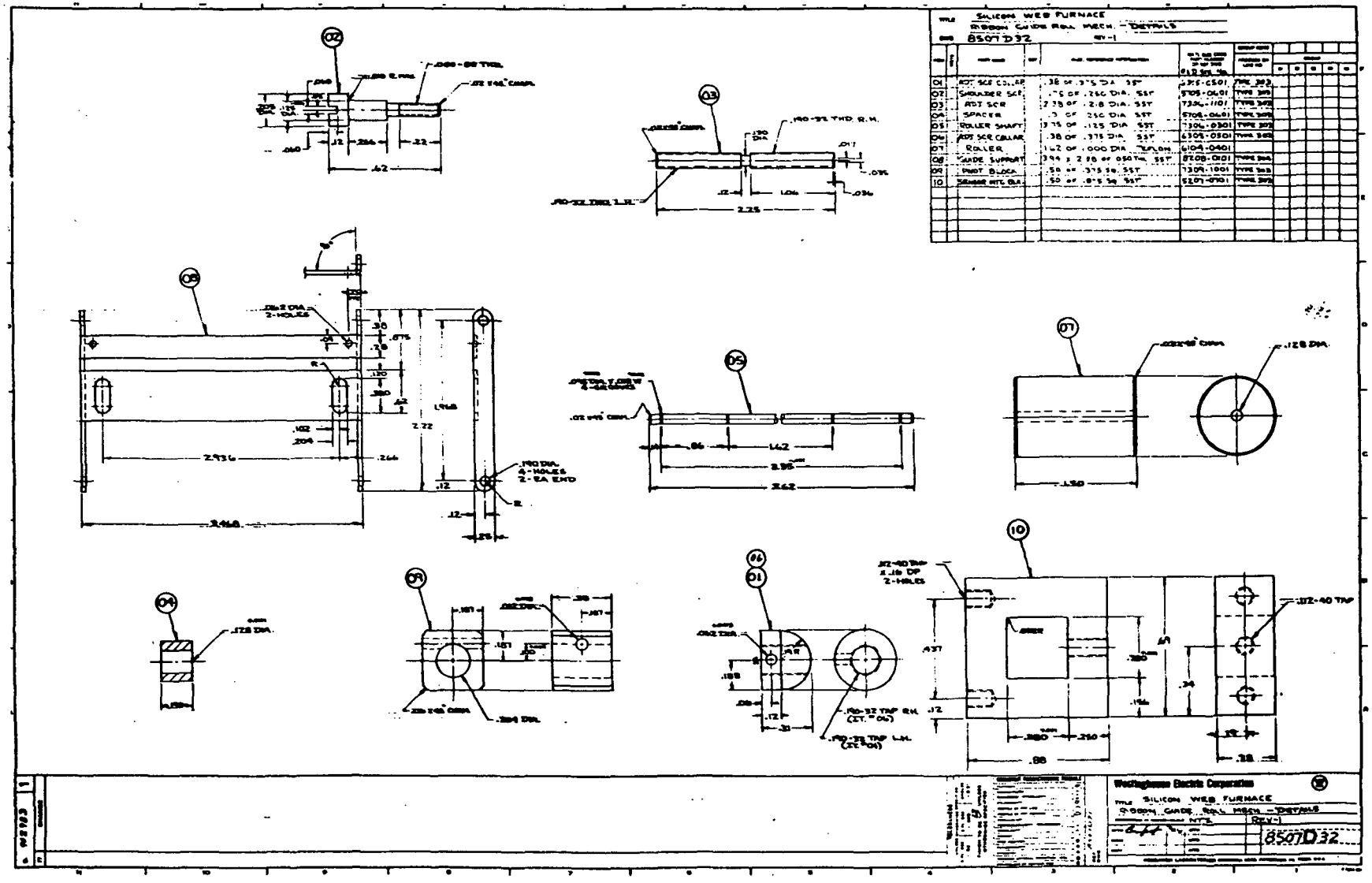
SILICON WEB FURNACE
RIBBON GUIDE ROLL MECH. - DETAILS
8507D32
REV-1
Westinghouse Electric Corporation
SILICON WEB FURNACE
RIBBON GUIDE ROLL MECH. - DETAILS
8507D32
REV-1

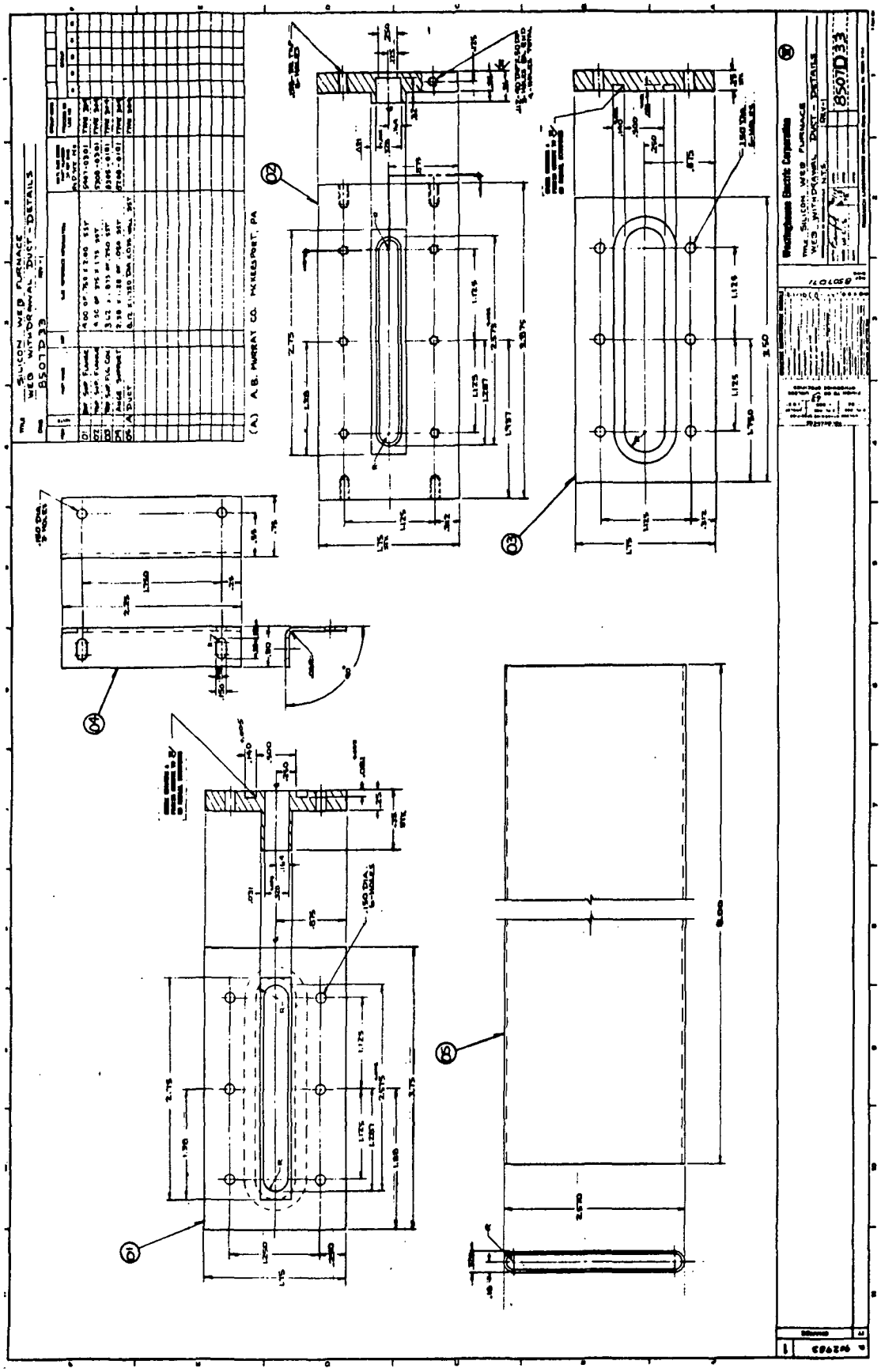
SILICON WEB FURNACE
WEB WITHDRAWAL DUCT - DETAILS
8501D33
(A) A.B. MURRAY CO. MCKEESPORT, PA
Westinghouse Electric Corporation
WEB WITHDRAWAL DUCT - DETAILS
8501D33

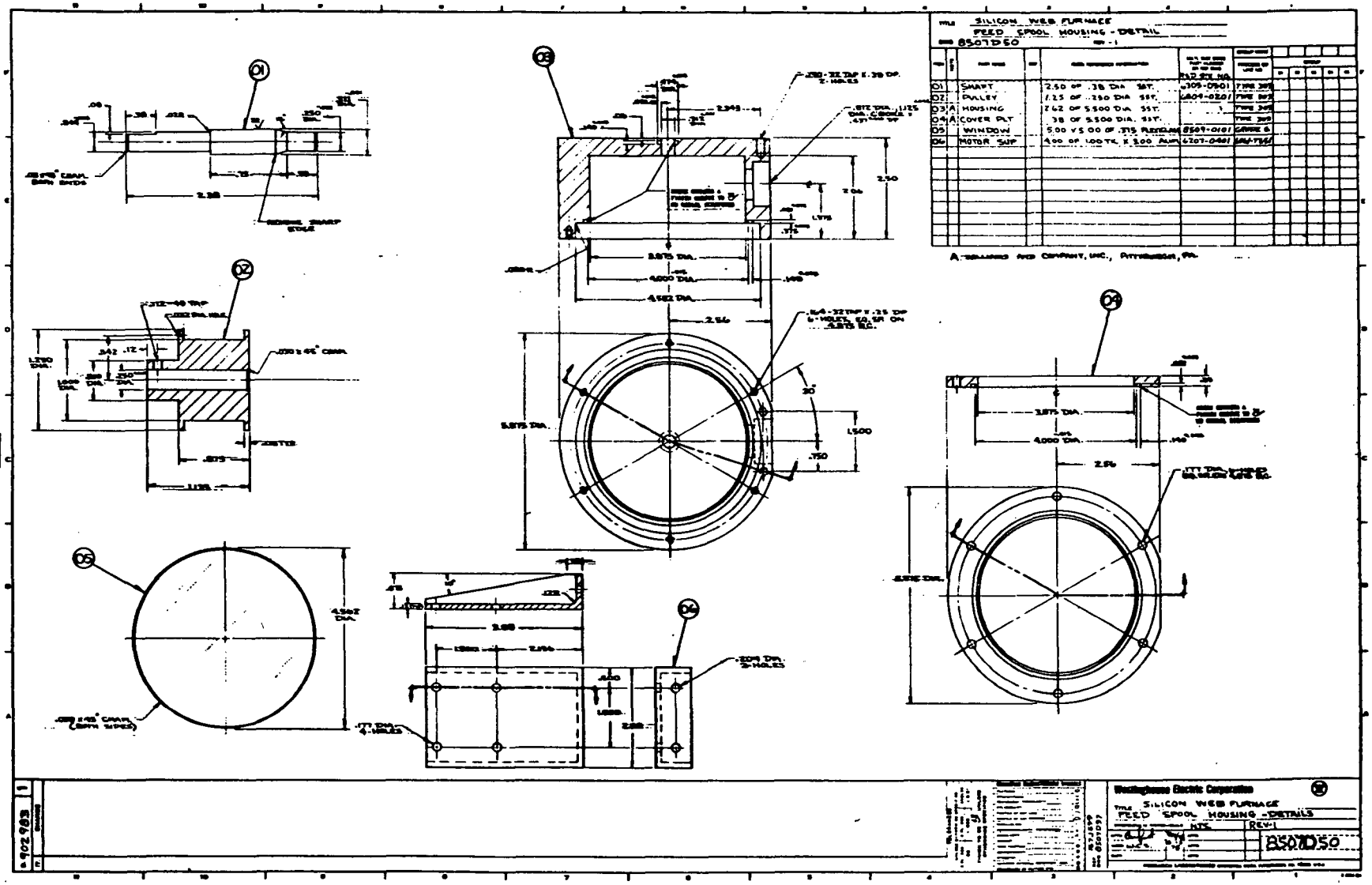
SILICON WEB FURNACE
FEED SPOOL HOUSING - DETAIL
8507D50
01
02
03
04
05
SHAFT
PULLEY
HOUSING
COVER PLT
WINDOW
MOTOR SUP
Westinghouse Electric Corporation
SILICON WEB FURNACE
FEED SPOOL HOUSING -DETAILS
8507D50

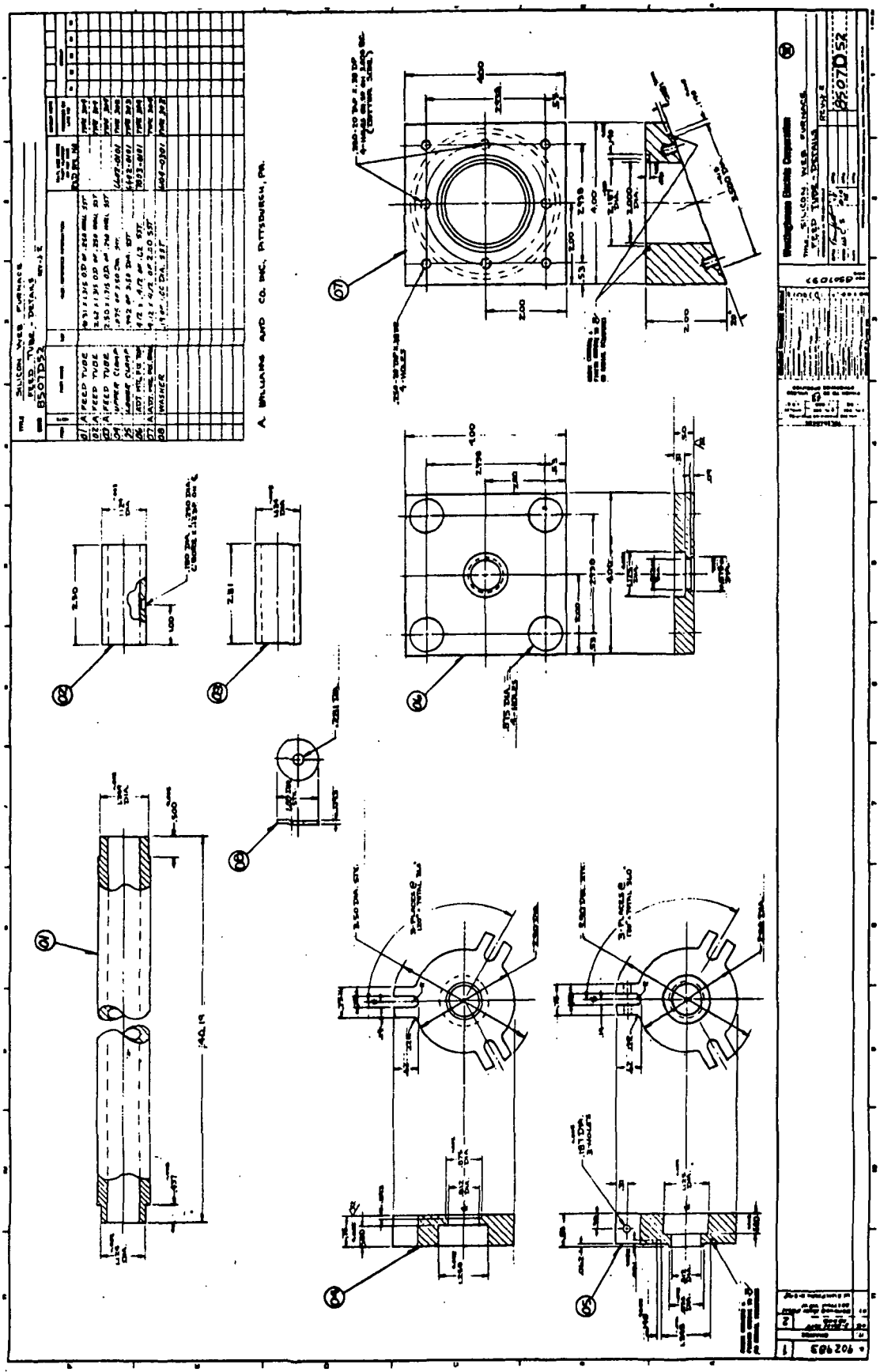

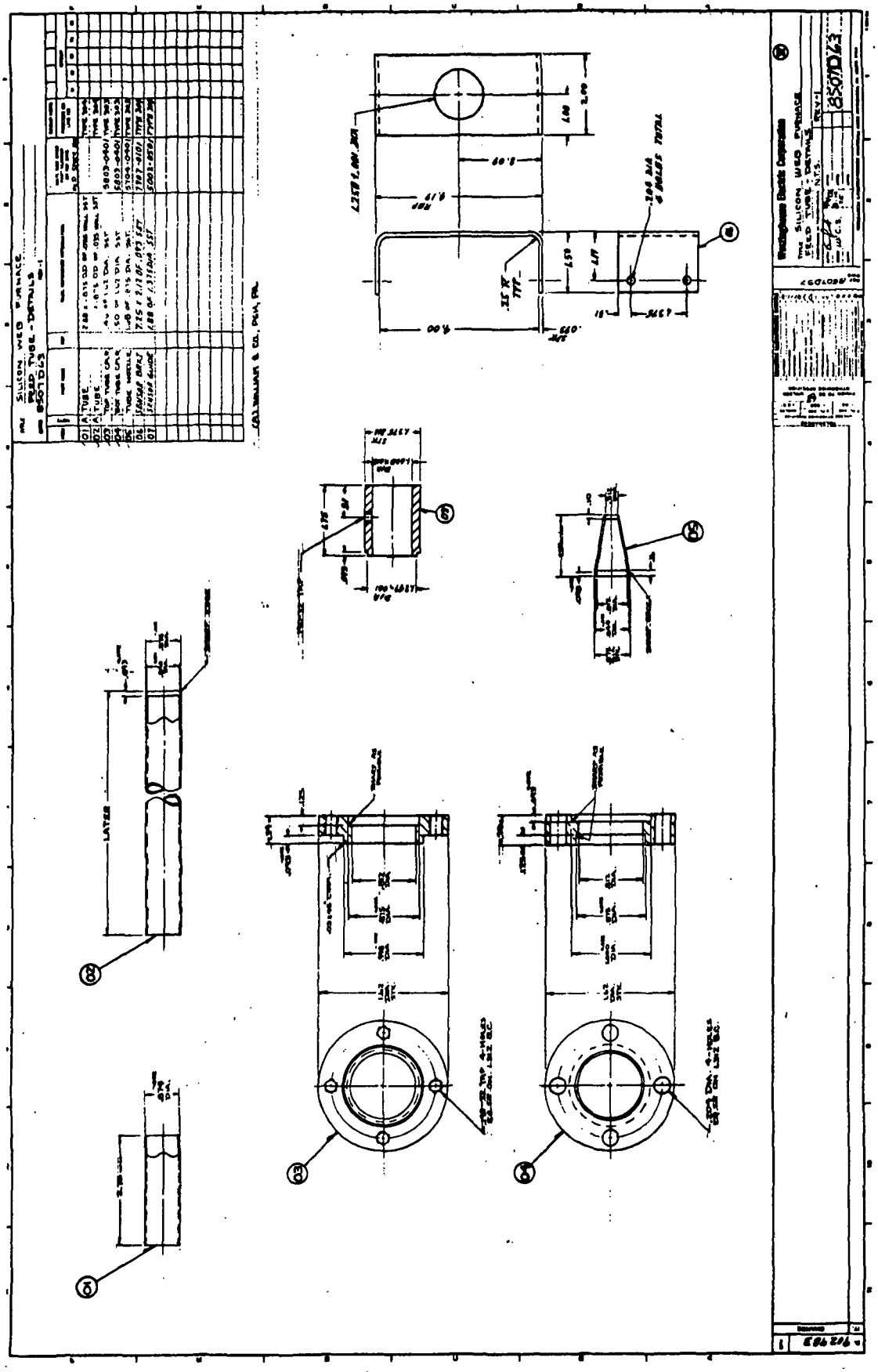

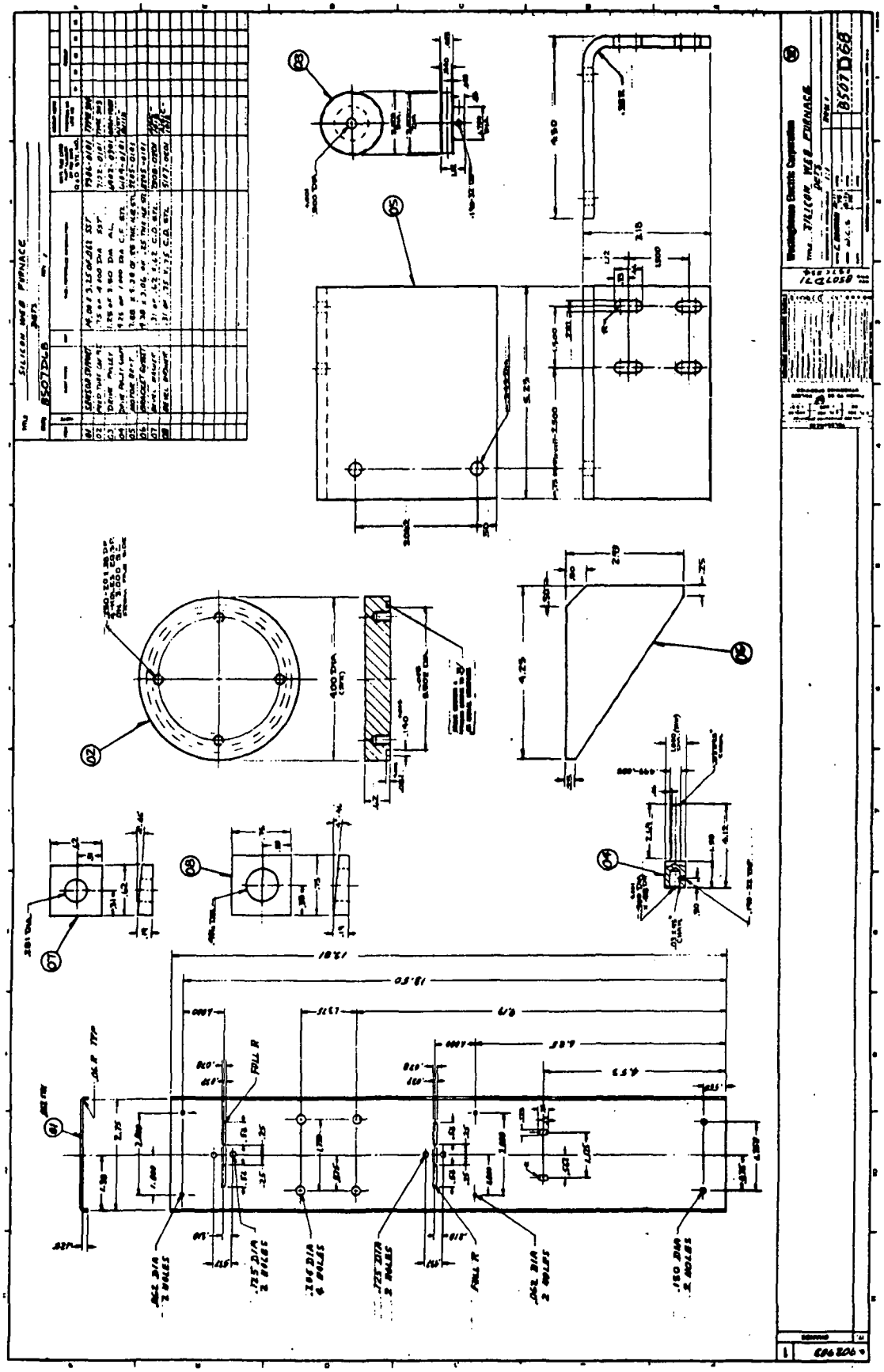

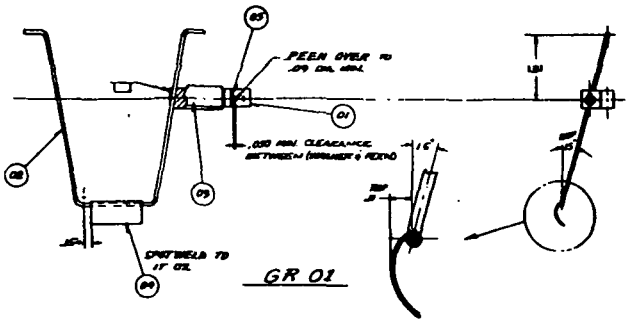

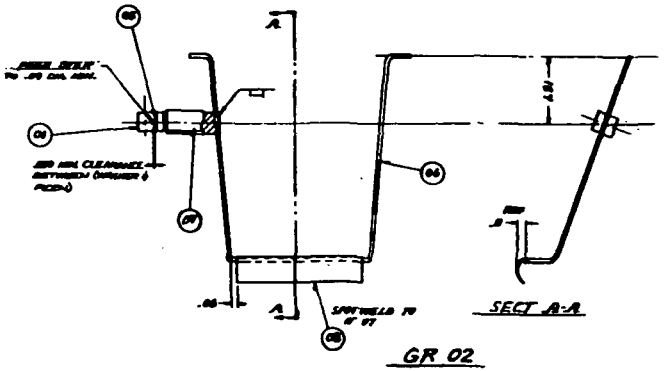

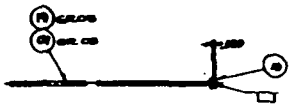

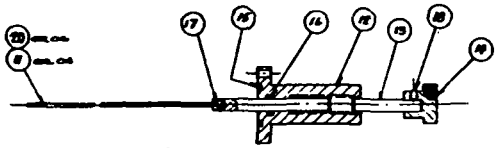

ITEM	QTY	PART NAME	MAT'L	PART REFERENCE INFORMATION	VENDOR PART NUMBER OR MFG. PART NUMBER	MANUFACTURER'S NAME OR CODE	1	2	3	4	5
01		PIVOT BLK	SS		8516D77G03		1	1			
02		EDGE GUIDE G/P	SS		8516D77G05		1				
03		PIVOT	SS		8516D77G08		1				
04		EDGE GUIDE	SS		8516D77G10		1				
05		WASHER	SS	.093 DIA HOLE IN .187			1	1			
06		FACE GUIDE G/P	SS		8516D77H06			1			
07		PIVOT	SS		8516D77H07			1			
08		FACE GUIDE	SS		8516D77H08			1			
09		PUSH ROD	SS		8516D77H09				1		
10		ROD CAP	SS		8516D77H10				1		1
11		PUSH ROD ASSY	SS		8503K96G03					1	1
12		ADJ SCR ASS	SS		P8516D77H01					1	1
13		ADJ SCR	SS		8516D77H02					1	1
14		RH08	SP		257C034H03					1	1
15	A	O-RING	BCS	.47 I.D. x .75 O.D. x .09 W 90 DUR	2-147-75					1	1
16	A	O-RING	BCS	.75 I.D. x .98 O.D. x .06 W 90 DUR	2-147-75					1	1
17	B	CAPTIVE PIN	SS	.125 DIA. x .75 LG. PVC 90 DUR	C-9					1	1
18		SET SCR		.138-32 x .25 LG. STL						1	1
19		PUSH ROD	SS		8516D77H09						
20		PUSH ROD ASSY	SS		8503D96G03						

A - PARKER SEAL CO., LEXINGTON, KY.
B - PIC DESIGN CORP., RIDGEFIELD, CT.

TITLE	SILICON WEB FURNACE SUB ASSY'S		
DWG NO.	8507D69	REV	1
SIZE	D		
SCALE	NONE		

Westinghouse Electric Corporation

8507D69

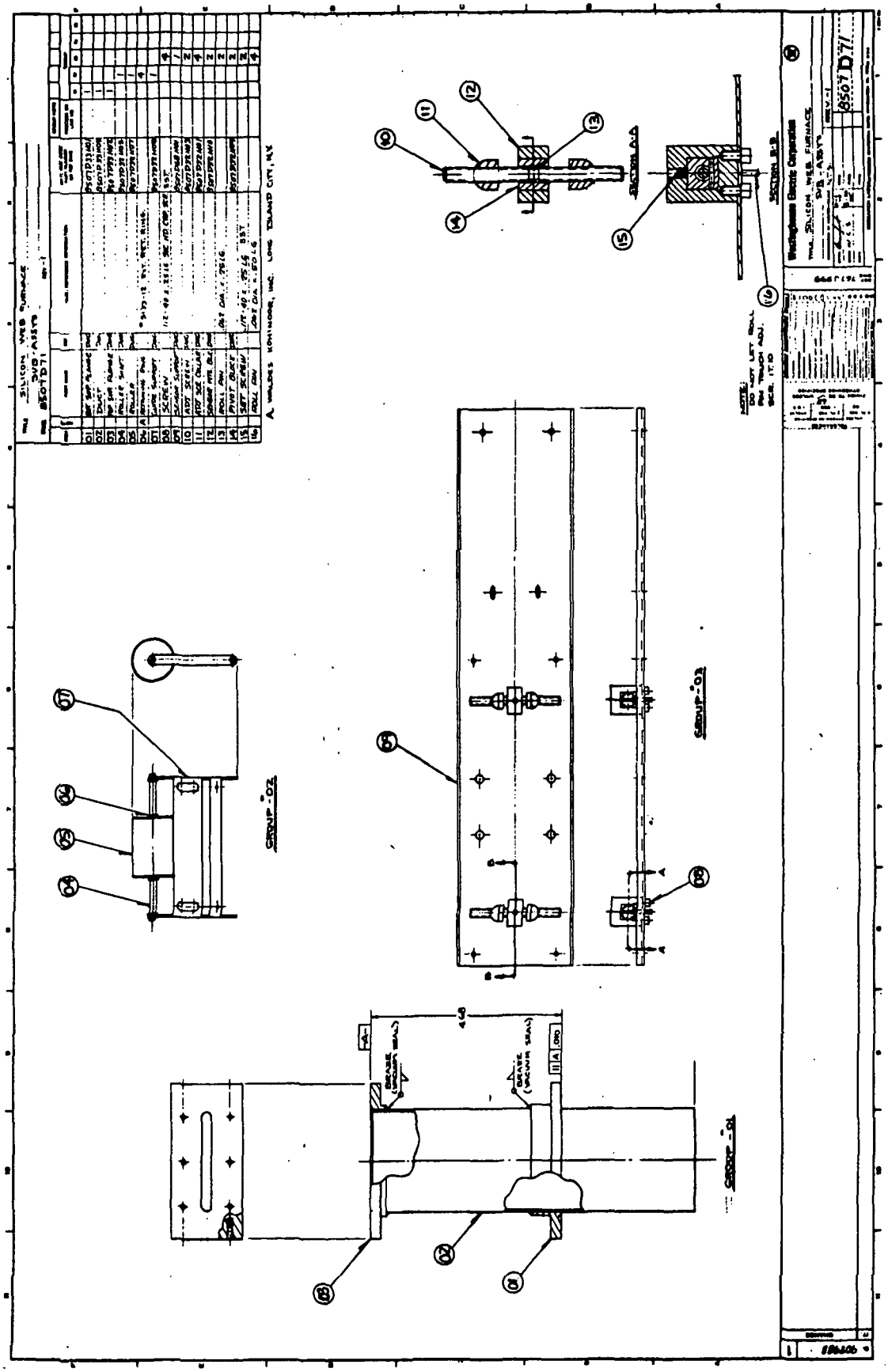

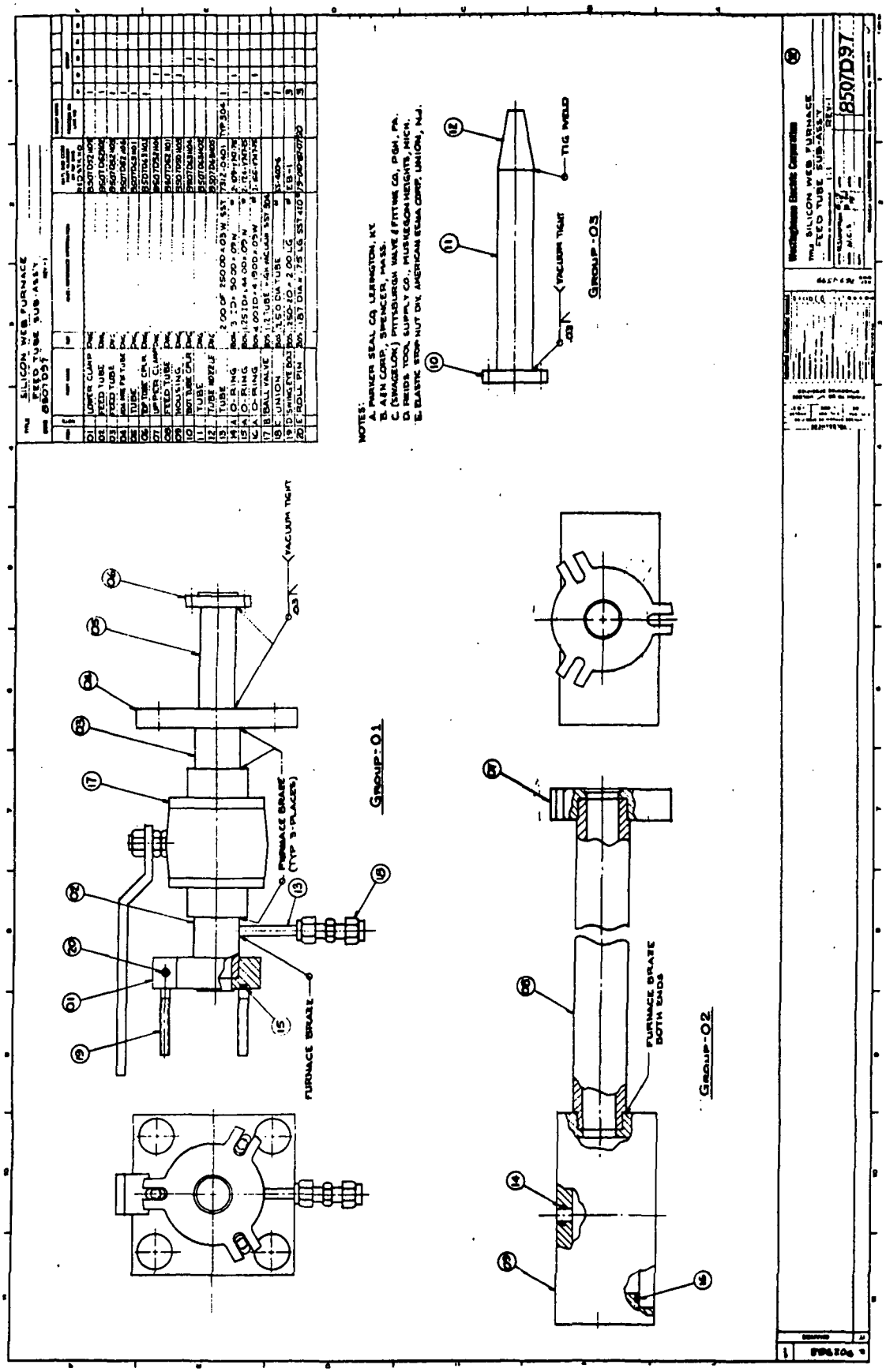
SILICON WEB FURNACE
FEED TUBE SUB-ASSY
850TD97
NOTES:
A. PARKER SEAL CO. LEXINGTON, KY.
B. ALIN CORP., SPENCER, MASS.
C. (SWAGELOK) PITTSBURGH VALVE & FITTING CO., PGH., PA.
D. REDS TOOL SUPPLY CO., MUSKEGON HEIGHTS, MICH.
E. ELASTIC STOP NUT DIV. AMERICAN ESNA CORP., UNION, N.J.
TIG WELD
VACUUM TIGHT
.03
GROUP-03
VACUUM TIGHT
.03
FURNACE BRAZE (TYP 3-PLACES)
FURNACE BRAZE
GROUP-01
FURNACE BRAZE BOTH ENDS
GROUP-02

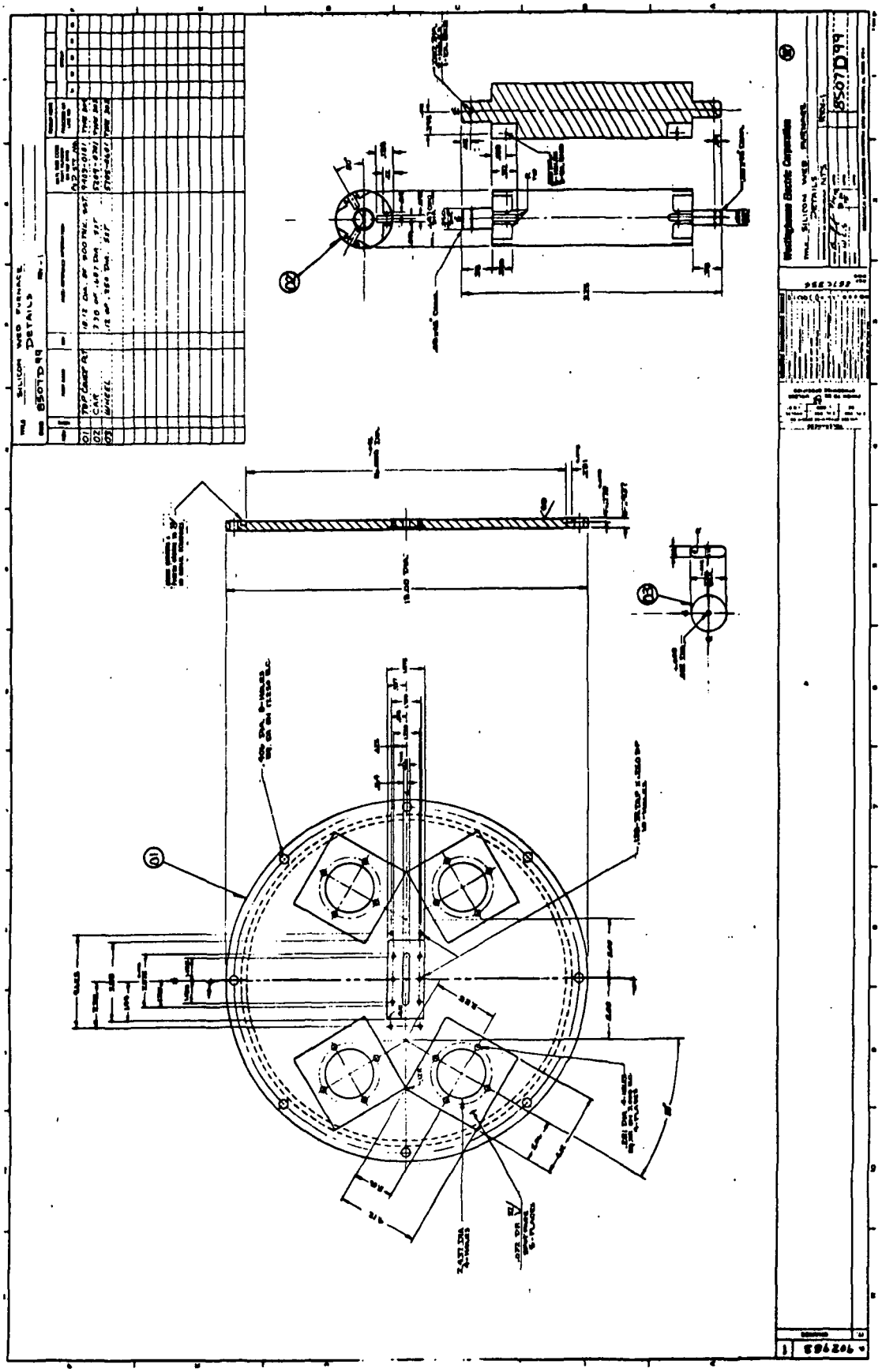

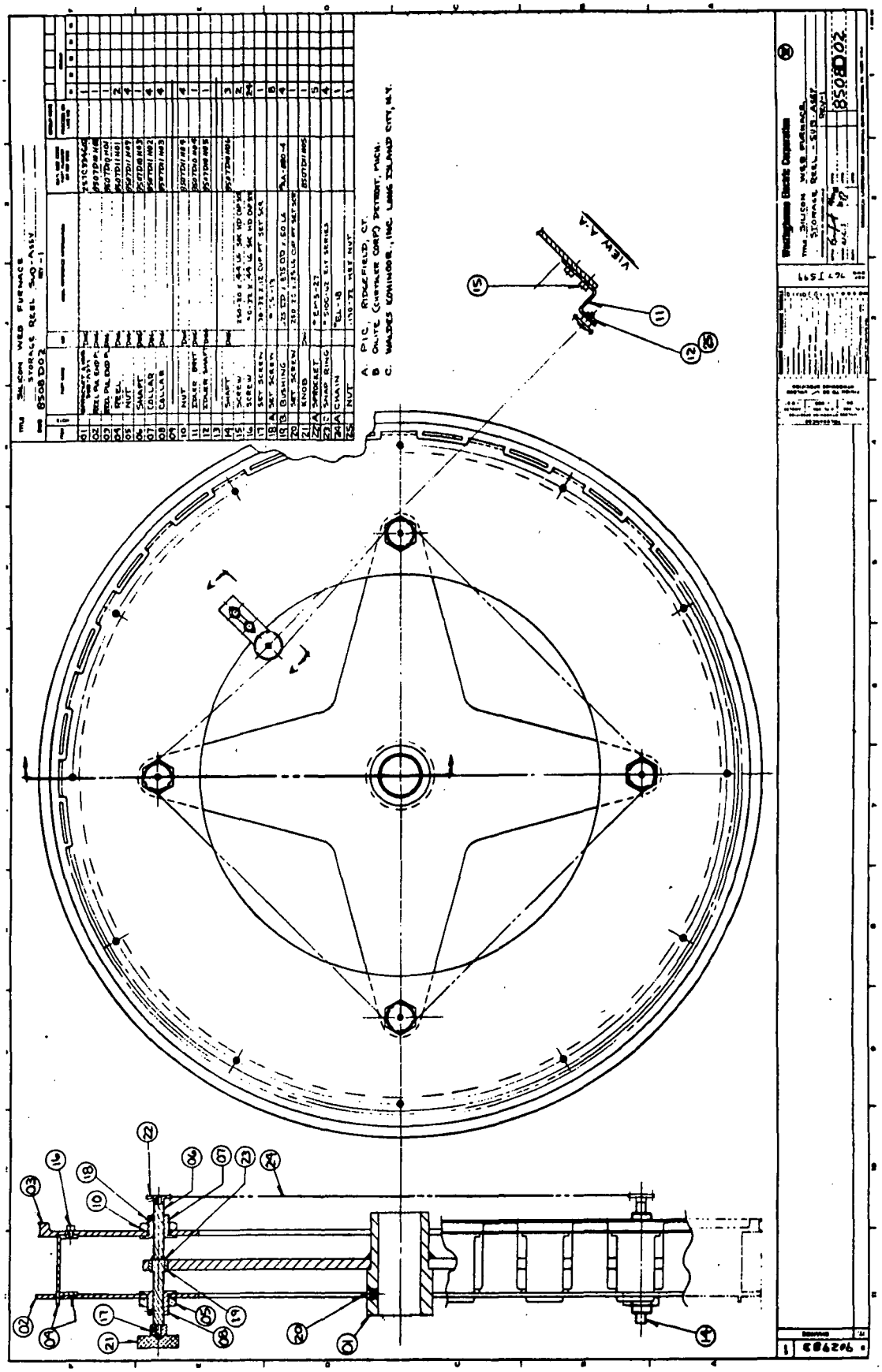

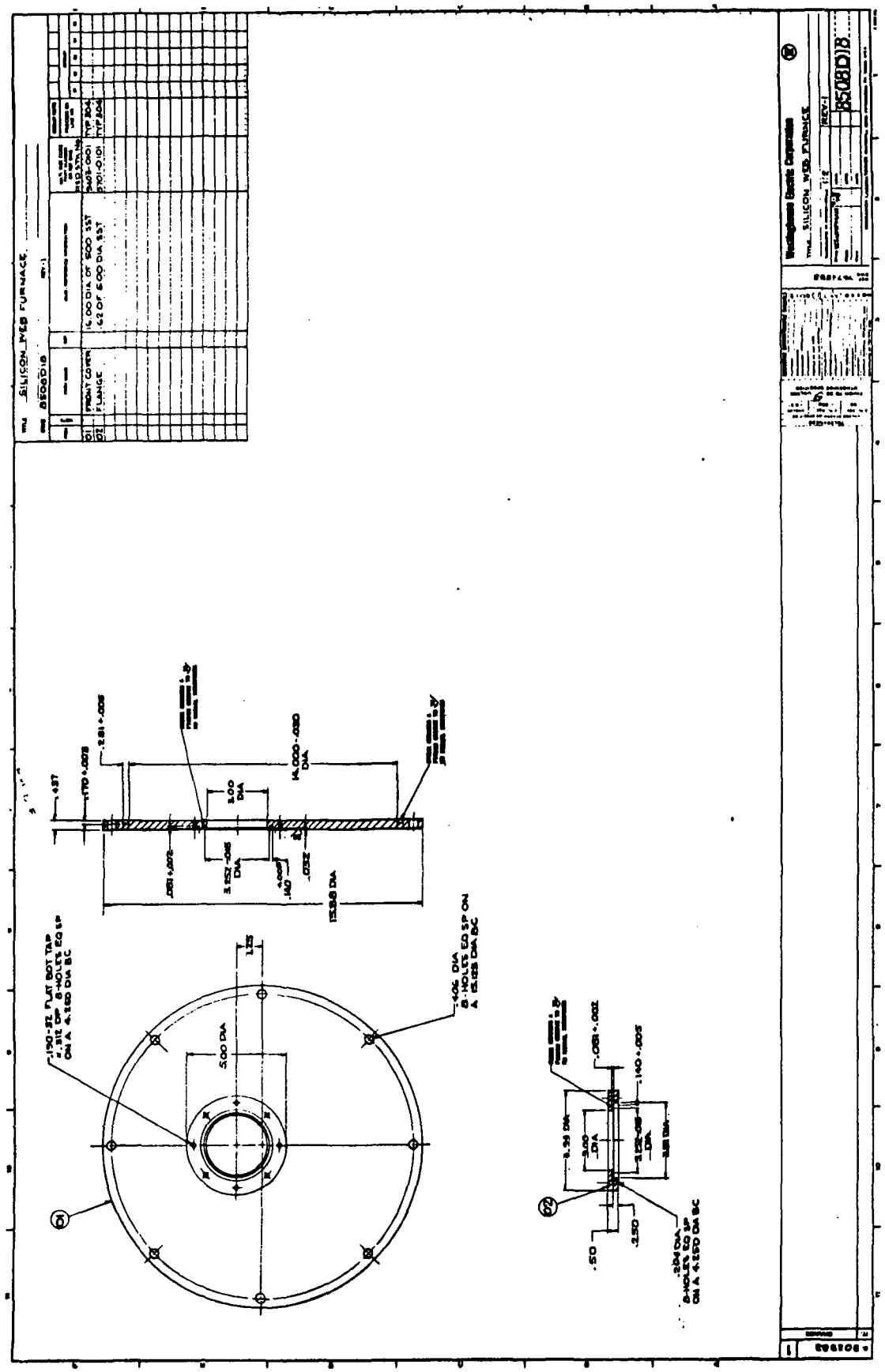
SILICON WEB FURNACE
8508D18
FRONT COVER
FLANGE
16.00 DIA OF 500 SST
.62 OF 6.00 DIA SST
5.00 DIA
14.000-.030 DIA
15.88 DIA
Westinghouse Electric Corporation
SILICON WEB FURNACE
REV-1
8508D18

TITLE SILICON WEB FURNACE
ALTERNATE STORAGE REEL

DWG 257C504 REV-1

ITEM	NOTE	PART NAME	DEF	(SIZE) REFERENCE INFORMATION	MATL SIZE CODE PART NUMBER OR REF DWG R&D STK NO	GROUP NOTE PROCESS OR LINE NO	GROUP 01	02	03	04	05
01		RIM		MAKE FROM AL		6061-T6	1				
02		RIB		34.50 DIA x .75 THK AL	9002-0101	6061-T6	1				
03		HUB		5.25 OF 3.50 DIA AL	6902-0301	6061-T6	1				

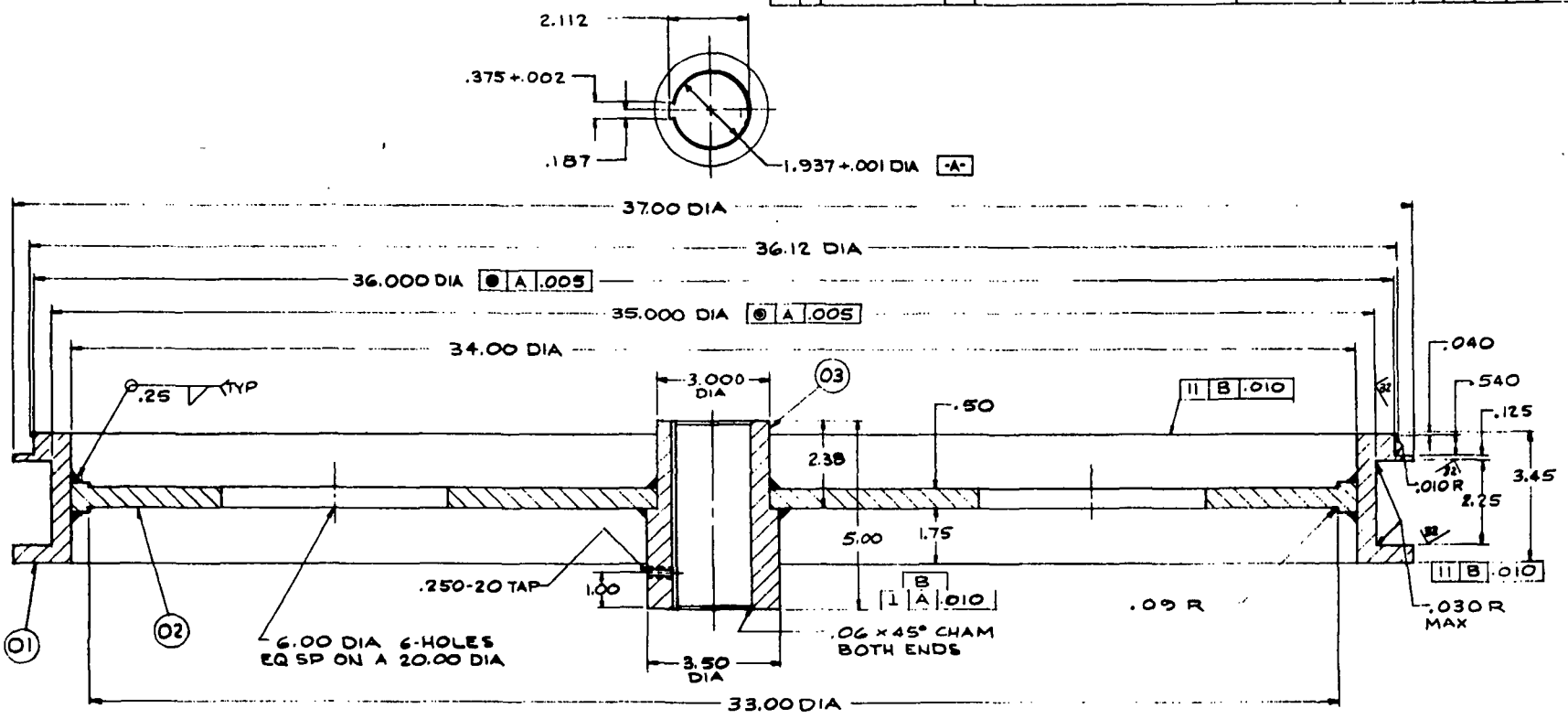

IT.	CHANGE
1	D 902983

TOLERANCES: UNLESS OTHERWISE SPECIFIED 3 PL. DEC. ±.02; 2 PL. DEC. ±.005; ANGLES ±0.5°; FINISH TO BE 63 UNLESS OTHERWISE SPECIFIED

GEOMETRIC CHARACTERISTIC SYMBOLS

FLATNESS	
STRAIGHTNESS	
ROUNDNESS (CIRCULARITY)	
CYLINDRICITY	
PROFILE OF ANY LINE	
PROFILE OF ANY SURFACE	
PARALLELISM	
PERPENDICULARITY (SQUARENESS)	
ANGULARITY	
RUNOUT	
TRUE POSITION	
CONCENTRICITY	
SYMMETRY	
MAXIMUM MATERIAL CONDITION (MMC)	
PROPERTIES OF FEATURE SIZE	

REF DWG 767J599

Westinghouse Electric Corporation

TITLE SILICON WEB FURNACE
ALTERNATE STORAGE REEL

DIMENSIONS IN INCHES—SCALE 1:2 REV-1

DFTM W. SUMPMAN	10-10-76	APPD	
CHKD W.C.S	10-10-76	APPD	
SUPV		APPD	

257C504

RESEARCH LABORATORIES CHURCHILL BORO, PITTSBURGH, PA 15240, U.S.A.

TITLE SILICON WEB FURNACE
SUB-ASS'Y.
DWG 257C334 REV. 1

ITEM	NOTE	PART NAME	DEF	(SIZE) REFERENCE INFORMATION	MATL SIZE CODE PART NUMBER OR REF DWG R&D STK. NO.	GROUP NOTE / PROCESS OR LINE NO	GROUP 01	02	03	04	05
01		CAR			8507D99H02		1				
02		WHEEL			8507D99H03		6				
03		PIN		.020 DIA. × .19 LG. DRILL ROD	6806-0601		6				
04		HUB			8506D39H02			1			
05		SPROCKET			8506D39H01			1			
06		PILLOW BLOCK			8507D19H04				1		
07	A	BUSHING		1.75 I.D. × 2.25 O.D. × 2.00 LG. OILITE #	AA-2204-2				1		
08		MOTOR BKT.			8507D68H05					1	
09		GUSSET			8507D68H06					1	
10		SENSOR GUIDE			8507D63H07						1
11		SENSOR BKT.			8507D63H06						1

NOTE: A – AMPLEX DIV. CHRYSLER CORP., DETROIT, MICH.

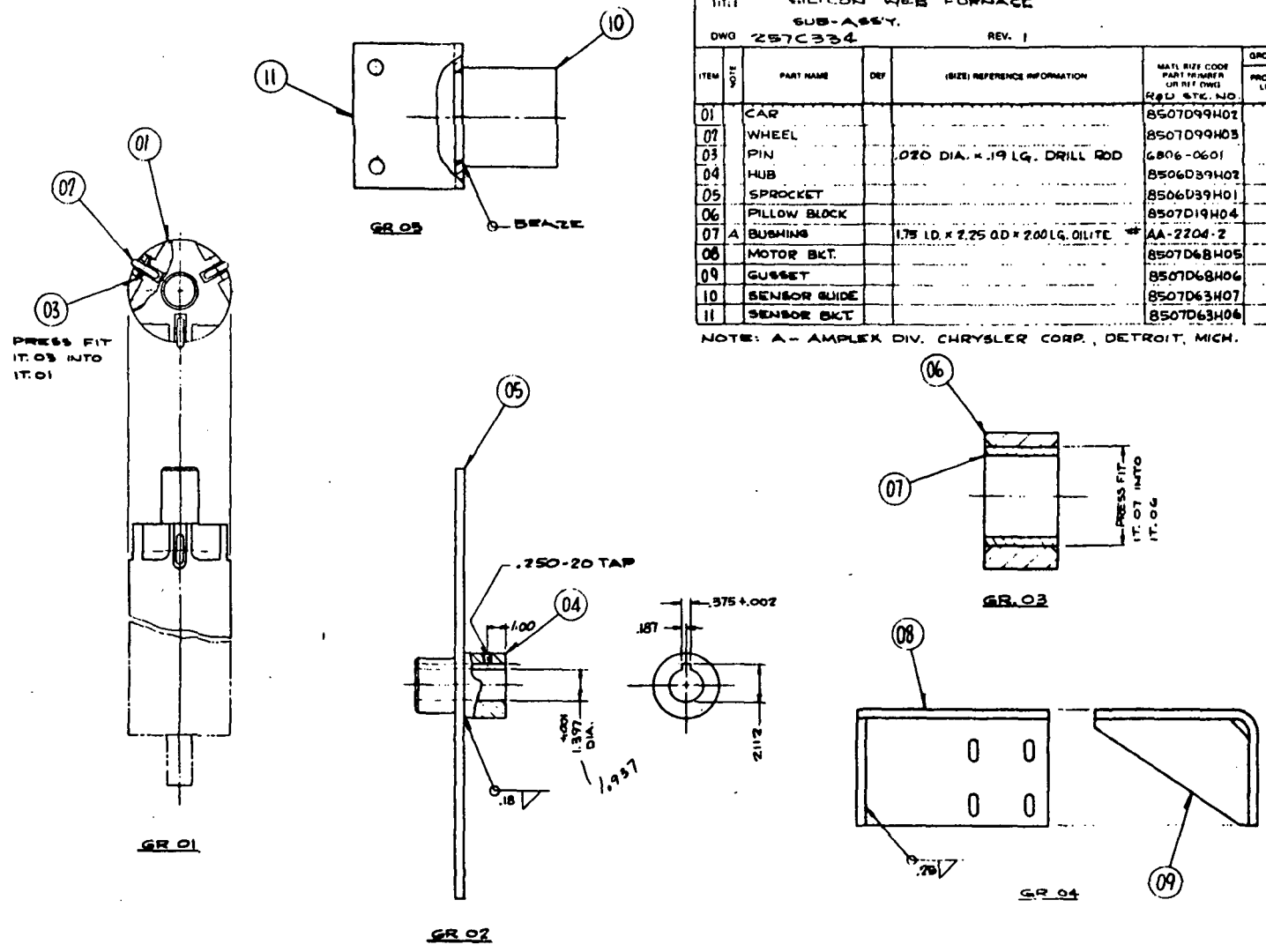

IT.	CHANGE	
0.902983	1	

TOLERANCES: UNLESS OTHERWISE SPECIFIED

FINISH TO BE ✓ UNLESS OTHERWISE SPECIFIED

GEOMETRIC CHARACTERISTIC SYMBOLS

REF 8508D02
DWG 767J599

Westinghouse Electric Corporation

TITLE SILICON WEB FURNACE
SUB-ASS'YS.

DIMENSIONS IN INCHES—SCALE

REV. 1

DFTM J. VISNICK 8-20-75 APPD
CHKD W. C. S. 8-21-75 APPD
SUPV APPD

257C334

RESEARCH LABORATORIES CHURCHILL BORO, PITTSBURGH, PA 15235, U.S.A.

DISTRIBUTION LIST

NASA

NASA, Scientific and Technical
Information Facility
P.O. Box 8757
Baltimore-Washington International
Airport
Baltimore, MD 21240
(40 copies + 1 reproducible)

Mr. James B. Lazar
Code RP
National Aeronautics & Space
Administration
Washington, DC 20546

Mr. Simon Manson
Code NT
National Aeronautics & Space
Administration
Washington, DC 20546

Mr. Norman J. Mayer
Code RWS
National Aeronautics & Space
Administration
Washington, DC 20546

Mr. H. Kurt Strass
Code NT
National Aeronautics & Space
Administration
Washington, DC 20546

Mr. R. D. Ginter
Code NE
National Aeronautics & Space
Administration
Washington, DC 20546

Office of Technology
Code KT
National Aeronautics & Space
Administration
Washington, DC 20546

Ames

Dr. Robert J. Debs
Code PDS N-244-14
Ames Research Center
National Aeronautics & Space
Administration
Moffett Field, CA 94035

Goddard

Mr. Edward M. Gaddy
Code 711
Goddard Space Flight Center
National Aeronautics & Space
Administration
Greenbelt, MD 20771

Mr. Charles MacKenzie
Code 711
Goddard Space Flight Center
National Aeronautics & Space
Administration
Greenbelt, MD 20771

Mr. Luther W. Slifer, Jr.
Code 711
Goddard Space Flight Center
National Aeronautics & Space
Administration
Greenbelt, MD 20771

Lewis Research Center

Mr. N. T. Musial
MS 500-113
NASA-Lewis Research Center
21000 Brookpark Road
Cleveland, OH 44135

Mr. Leonard W. Schopen
MS 500-206
NASA-Lewis Research Center
21000 Brookpark Road
Cleveland, OH 44135

NASA-Lewis Research Center
Attn: Library (2 copies)
21000 Brookpark Road
Cleveland, OH 44135

Mr. Americo F. Forestieri
MS 302-1
NASA-Lewis Research Center
21000 Brookpark Road
Cleveland, OH 44135

Report Control Office
MS 5-5
NASA-Lewis Research Center
21000 Brookpark Road
Cleveland, OH 44135

Mr. Roger S. Palmer
Mail Stop 302-1
NASA-Lewis Research Center
21000 Brookpark Road
Cleveland, OH 44135

Mr. Gerald F. Hein
NASA-Lewis Research Center (302-1)
Cleveland, OH 44135

Dr. Henry W. Brandhorst, Jr.
MS 302-1
NASA-Lewis Research Center
21000 Brookpark Road
Cleveland, OH 44135

Mr. Larry R. Scudder
MS 302-1
NASA-Lewis Research Center
21000 Brookpark Road
Cleveland, OH 44135 (20 copies)

Dr. Louis Rosenblum
MS 302-1
NASA-Lewis Research Center
21000 Brookpark Road
Cleveland, OH 44135

Mr. Daniel T. Bernatowicz
MS 302-1
NASA-Lewis Research Center
21000 Brookpark Road
Cleveland, OH 44135

Langley

Mr. Walter E. Ellis
MS 488
Langley Research Center
National Aeronautics & Space Administration
Hampton, VA 23665

Mr. Gilbert A. Haynes
MS 488
Langley Research Center
National Aeronautics & Space Administration
Hampton, VA 23665

Mr. Jack F. Zanks
MS 488
Langley Research Center
National Aeronautics & Space Administration
Hampton, VA 23665

Johnson

Mr. James L. Cioni
Code EP5
Johnson Spacecraft Center
National Aeronautics & Space Administration
Houston, TX 77058

Marshall

Mr. J. L. Miller, Code EC-12
NASA, Marshall Space Flight Center
Huntsville, AL 35812

JPL

Dr. Bruce Anspaugh
MS 198-220
Jet Propulsion Laboratory
4800 Oak Grove Drive
Pasadena, CA 91103

Mr. Paul Berman
MS 198-220
Jet Propulsion Laboratory
4800 Oak Grove Drive
Pasadena, CA 91103

Dr. T. DIgges, Jr.
MS 198-220
Jet Propulsion Laboratory
4800 Oak Grove Drive
Pasadena, CA 91103

Mr. John V. Goldsmith
MS 198-220
Jet Propulsion Laboratory
4800 Oak Grove Drive
Pasadena, CA 91103

Dr. A. Zoutendyk
MS 198-220
Jet Propulsion Laboratory
4800 Oak Grove Drive
Pasadena, CA 91103

Mr. Walter A. Hasbach
MS 198-220
Jet Propulsion Laboratory
4800 Oak Grove Drive
Pasadena, CA 91103

Mr. Lloyd D. Runkle
MS 198-220
Jet Propulsion Laboratory
4800 Oak Grove Drive
Pasadena, CA 91103

Dr. Richard Stirn
MS 198-220
Jet Propulsion Laboratory
4800 Oak Grove Drive
Pasadena, CA 91103

Mr. R. Gilbert Downing
MS 198-220
Jet Propulsion Laboratory
4800 Oak Grove Drive
Pasadena, CA 91103

Air Force

AFAPL/POE-2/L. D. Massie
Wright-Patterson AFB, OH 45433

SAMSO SAFSP-8
P.O. Box 92960
Worldway Postal Center
Los Angeles, CA 90009

AFAPL/POW-2/J. F. Wise
Wright-Patterson AFB, OH 45433

Army

Dr. Emil Kittl
USAECOM
Attn: AMSEL-TL-PE
Fort Monmouth, NJ 07703

Navy

Mr. E. L. Brancato, Code 4101
Naval Research Laboratory
4555 Overlook Avenue, S.W.
Washington, DC 20375

Commander Steve Linder
Naval Air Systems Command
Code Air 52022F1
Washington, DC 20361

Mr. Richard L. Statler
Naval Research Laboratory
Code 6603F
Washington, DC 20375

Other Government Organizations

Mr. William R. Cherry
Solar Research Division
Energy Research Development
Administration
1800 G Street, NW
Washington, DC 20545

Dr. Lloyd Herwig
Solar Research Division
Energy Research Development
Administration
1800 G Street, N.W.
Washington, DC 20545

Dr. Morton Prince
Chief, Photovoltaic Branch
Energy Research & Development
Administration
20 Massachusetts Avenue
Washington, DC 20545

Dr. Harold L. Macomber (MS 3114)
Energy Research & Development
Administration
Division of Solar Energy
20 Massachusetts Avenue, NW
Washington, DC 20545

Dr. Leonard M. Magid
Energy Research & Development
Administration
Division of Solar Energy
20 Massachusetts Avenue, NW
Washington, DC 20545

Private Organizations

Mr. E. R. Berry
Aerospace Corporation
P. O. Box 92957
Los Angeles, CA 90009

Dr. Leon D. Crossman
Dow Corning Corporation
12334 Geddes Road
Hemlock, MI 48626

Mr. H. J. Killian
Aerospace Corporation
Box 92957
Los Angeles, CA 90009

Mr. J. A. Albeck
Marketing Manager
Aerospace Group
Spectrolab, Division of Textron, Inc.
12500 Gladstone Avenue
Sylmar, CA 91342

Professor Joseph J. Loferski
Division of Engineering
Brown University
Providence, RI 02912

Dr. James A. Naber
Intelcom Rad. Tech.
7650 Convoy Court
P. O. Box 80817
San Diego, CA 92138

Mr. W. J. Billerback
COMSAT Labs
P. O. Box 115
Clarksburg, MD 20734

Mr. Denis Curtin
COMSAT Labs
P. O. Box 115
Clarksburg, MD 20734

Dr. Andrew Meulenberg
COMSAT Labs
P. O. Box 115
Clarksburg, MD 20734

Mr. R. C. Lyle
Exotech Systems, Inc.
1200 Quince Orchard Boulevard
Gaithersburg, MD 20760

Dr. James McCormick
Dow Corning Corporation
12334 Geddes Road
Hemlock, MI 48626

Mr. Kenneth Hanson
General Electric Company
Valley Force Space Technology Center
P. O. Box 8555
Philadelphia, PA 19101

Dr. G. H. Schwuttke
IBM, Dept. 267, Bldg. 300-90
East Fishkill Facility
Hopewell Junction
New York, NY 12533

Mr. Larry Gibson
Aerospace Corporation
Box 92957
Los Angeles, CA 90009

Mr. Robert C. Hamilton
Institute for Defense Analyses
400 Army-Navy Drive
Arlington, VA 22202

Mr. A. D. Tonelli
Department A3-253-MS 13-3
McDonnell Douglas Astronautics Co.
Huntington Beach, CA 92647

Mr. A. A. Nussberger, D/191-200, SK09
North American Rockwell Corporation
Space Division
12214 Lakewood Boulevard
Downey, CA 90241

Mr. Isadore M. Sachs
Optical Coating Laboratory, Inc.
P. O. Box 1599
Santa Rosa, CA 95403

Mr. Donald C. Briggs
WDL Division MS G80
Philco-Ford Corporation
3939 Fabian Way
Palo Alto, CA 94303

Mr. Richard Grant
WDL Division MS-Z-31
Philco-Ford Corporation
3939 Fabian Way
Palo Alto, CA 94303

Power Information Center
University City Science Center
3401 Market Street, Room 2210
Philadelphia, PA 19014

Mr. Paul Rappaport
RCA Corporation
David Sarnoff Research Center
Princeton, NJ 08450

Mr. Henry Oman
The Boeing Company
Research & Engineering Division
P. O. Box 3999
Seattle, WA 98124

Solarex Corporation
1335 Piccard Drive
Rockville, MD 20850

Dr. Gerald L. Pearson
Stanford University
Stanford Electronics Labs
Stanford, CA 94305

Mr. Arvin H. Smith
Thermo Electron Corporation
101 First Avenue
Waltham, MA 02154

Mr. Hans Rauschenbach, M1-1406
TRW Systems
One Space Park
Redondo Beach, CA 90278

Mr. Werner Luft
TRW Systems
Group MS-M1/1208
One Space Park
Redondo Beach, CA 90278

John D. Meakin
Associate Director
Institute of Energy Conversion
University of Delaware
Neward, DL 19711

Dr. Frederick Morse
Department of Mechanical Engineering
University of Maryland
College Park, MD 20742

Professor Martin Wolf
University of Pennsylvania
260 Towne Building - D3
Philadelphia, PA 19174

Dr. Ken Ling
Optical Coating Laboratory, Inc.
15251 Don Julian Road
City of Industry, CA 91746

Mr. Aaron Kirpich
Electrical Systems
General Electric Company
Space Systems
P. O. Box 8555
Philadelphia, PA 19101

Mr. Eugene L. Ralph
Heliotek, Division of Textron
12500 Gladstone Avenue
Sylmar, CA 91342

Mr. George Ewald
Terrestrial Power Sales Manager
Optical Coating Laboratory, Inc.
15251 Don Julian Road
City of Industry, CA 91746

Dr. Edward Mlavsky
Mobil Tyco Solar Energy Corp.
16 Kockory Drive
Waltham, MA 02154

John Furber
1717 18th Street, NW
Washington, DC 20009

Professor J. R. Hauser
North Carolina State University
Electrical Engineering Department
Box 5275
Raleigh, NC 27607

Professor C. T. Sah
University of Illinois
Urbana-Champaign Campus
Dept. of Electrical Engineering
Urbana, IL 61801

Professor S. S. Li
University of Florida
College of Engineering
Dept. of Electrical Engineering
Gainesville, FL 32611

Professor F. A. Lindholm
University of Florida
College of Engineering
Dept. of Electrical Engineering
Gainesville, FL 32611

Mr. Jacob H. Paster
Tyco Corporate Technology Center
16 Hickory Drive
Waltham, MA 02154

Mr. Richard E. Engdahl
President
Deposits & Composites Incorporated
1821 Michael Faraday Drive
Reston, VA 22090

Westinghouse Research Laboratories
TECHNICAL DOCUMENT SUMMARY

CONTRACT-REQUIRED DOCUMENT
Internal Distribution Only

This document is not to be distributed outside the Westinghouse Electric Corporation. (For information contact Contract Administration.)

Document No.: 76-9C4-SIGRO-R1 Proprietary Class: Gov't Date: Dec. 22, 1977

Title: DESIGN, FABRICATION AND TEST OF PROTOTYPE FURNACE FOR CONTINUOUS GROWTH OF WIDE SILICON RIBBON

Author(s): C. S. Duncan and R. G. Seidensticker

Sponsor: NASA-Lewis Research Center
Contract NAS 3-19439

Department: Crystal Science & Technology

Pages: 111 References: 15 Keywords: Silicon, webs, ribbons, crystals, growth, facilities, design, solar, cells, furnaces, convection, temperature, distributions, oxide.

SUMMARY (Purpose, Scope, Approach, Results, Conclusions, Significance):

This is the final report of a program having the overall objective of growing wide, thin silicon dendritic web crystals quasi-continuously from a semi-automated facility. This report covers the design considerations and fabrication of the facility as well as the test and operation phase; detailed engineering drawings are included as an appendix to the report.

During the test and operation phase of the program, more than eighty growth runs and numerous thermal test runs were performed. At the conclusion of the program, 2.4 cm wide web was being grown at thicknesses of 100 to 300 μm. As expected, the thickness and growth rate are closely related. Solar cells made from this material were tested at NASA-Lewis and found to have conversion efficiencies comparable to devices fabricated from Czochralski material. Finally, recommendations are given for the design of more advanced dendritic growth facilities.

TO RESEARCH LABORATORIES LIBRARY

SEND COPY OF DOCUMENT NO. 76-9C4-SIGRO-R1 TO:

Name _____

Plant _____

Dept. _____

Charge No. _____

(Print plainly, this is your mailing label)

☐ Hard Copy* ☐ Microfiche

*No charge until out of stock. Then, hard copy will be furnished only when you request it and include your complete charge number to cover the $0.25/page charge and a $1.00 service charge. Otherwise, once hard copies are gone microfiche copies will be furnished routinely, at no cost.

RESEARCH REPORT 76-9C4-SIGRO-R1

DISTRIBUTION LIST

R&D Center, Churchill Site	R&D Center, Churchill Site
*G. F. Mechlin	*J. A. Galasso
*W. E. Shoupp	*E. L. Keller
*J. W. Coltman	*H. D. Greenberg
*D. R. Muss	*R. E. LaCroix
*R. T. Begley	*Yolanda A. Willis
*R. E. Fox	R. Mazelsky
*D. K. Fox	D. J. Page
*R. D. Haun, Jr.	R. H. Hopkins
*F. T. Thompson	J. P. McHugh
*J. H. Bechtold	D. L. Barrett
*G. W. Wiener	R. E. Kothmann
*J. K. Hulm	P. Rai-Choudhury
*S. A. Rosecrans	J. R. Davis
*E. J. Duckett	P. D. Blais
	Library (13)

*TDS ONLY